English

Installation, use, maintenance manual DualSun SPRING

v1.21
2023

Table of Contents

1. Introduction

1.1. General safety instructions

Please read this installation manual thoroughly and in detail in order to be able to fully exploit the functionality of the product. DualSun disclaims all liability for defetcs and damages that would result from non-compliance with the installation instructions (improper use, incorrect installation, handling error, etc.).

IMPORTANT

- It is important to follow these instructions for personal safety. Improper mounting may cause serious injury. The end user must keep these safety instructions.
- The installation, control, commissioning, maintenance and repair of the installation must only be carried out by qualified personnel.
- The correct functioning of the installation is only guaranteed if the installation and assembly have been carried out in accordance with the rules of the art.

CAUTION

- The entire solar installation must be installed and operated in accordance with recognized technical rules.
- All electrical work must be done according to local guidelines.
- The installation must not be used if it shows signs of damage.

DANGER

- For installations on roofs, it is necessary to comply with personal safety standards, relating to roofing and waterproofing work and relating to scaffolding work with safety net by mounting the respective devices before starting work . Refer to the recommendation published by the national risk prevention organization.
- Gloves are compulsory when handling the panels to avoid any risk of injury or burns.
- Disconnect all connection cables from the power supply before working on the installation.

1.2. General standards to be observed

To ensure safe, ecological and economical operation, all applicable regional and national standards, rules and directives must be observed, particularly the international standards mentioned below:

1.2.1. Photovoltaic solar standards

- CEI / EN 61215 1 and 2: Design qualification and approval of crystalline silicon photovoltaic (PV) modules for terrestrial application.

- CEI / EN 61730 1 and 2: Qualification for dependability of photovoltaic (PV) modules - part 1: Requirements for construction and part 2: requirements for tests.

1.2.2. Solar thermal standards

- EN 12975 1 and 2: General requirements and control method for solar thermal collectors.
- EN 12976 1 and 2: General requirements and process for testing prefabricated solar thermal installations.

The installation instructions and safety instructions must be met.

Observe the regulations on the prevention of industrial accidents prescribed by professional associations, in particular those relating to work carried out on the roof.

1.3. Solar thermal standards

FLASH and SPRING DualSun panels must be recycled

2. General description

2.1. The DualSun SPRING hybrid panel

DualSun SPRING is a new generation hybrid solar panel that provides both electricity (photovoltaic) and hot water (thermal) for homes.

Protected by several patents, the SPRING panel produces 2.5 times more energy than a photovoltaic panel of the same surface. This innovative technology saves space and total integration on the roof, at a competitive energy cost.

Our technology is the result of a double observation on photovoltaic panels:

- They produce much more heat (80%) than electricity (20%) when exposed to the sun,
- Their yield decreases when their temperature increases.

The SPRING panel thus absorbs solar energy to restore it in the form of two energies useful for the operation of buildings:

- Electricity through photovoltaic cells,
- Heat via a heat exchanger, completely integrated into the panel. This heat is captured at the DualSun SPRING panel exchanger by a heat transfer fluid. The latter transports the heat to the heat transfer device, which restores the calories of the heat transfer fluid to thermal storage or directly to the tank to be heated.

Thanks to a vertically integrated design of the photovoltaic and thermal components in a single panel (protected by 3 families of patents), the SPRING panel is specifically designed for optimized industrial manufacturing, making it more efficient, more aesthetic and cheaper than competitors.

Having the same shape as a conventional photovoltaic panel, the SPRING offers:

- A harmonious design and total integration into the roof,
- A real space saving thanks to a more efficient solar panel per m²,
- Simple and safe installation.

1. **Photovoltaic solar cells** : monocrystalline, high efficiency, they are cooled by the circulation of water
2. **Heat exchanger** : fully integrated into the panel, it allows excellent heat transfer between the photovoltaic front panel and the circulation of water.

For more details on the DualSun SPRING panel, you can consult the following chapters of the Installation, use, maintenance manual DualSun SPRING [4]:

- Technical characteristics of the DualSun SPRING panel [7]
- Recommended hydraulic flow rates for the DualSun SPRING panel [8]
- Maximum allowable pressures for the DualSun SPRING panel [9]

2.1.1. Technical characteristics of the DualSun SPRING panel

The physical, photovoltaic and thermal characteristics of the nybrid DualSun SPRING panel can be consulted in the datasheet published in in our online library.

The hydraulic pressure losses [55], the thermal behavior [60] and the thermal power [57] of the panel can be consulted in the appendix of this document.

Special features of the DualSun SPRING heat exchanger:

The heat exchanger of the DualSun SPRING hybrid solar panel is in Polypropylene, an elastomeric material.

The properties of the elastomer lead to the following phenomena:

- Mechanical relaxation effect
- Porosity effect
- Membrane effect

Mechanical relaxation effect:

Following the hydraulic commissioning of a pressurized (closed) circuit, the exchanger works mechanically under the effect of internal pressure. Mechanical relaxation of Polypropylene causes a very slight increase in the volume of the exchanger and consequently a drop in pressure. This phenomenon stabilizes when the heat exchanger is in mechanical equilibrium with the atmosphere.

Porosity effect:

If the Polypropylene is perfectly waterproof, this material is very slightly permeable to air. This means that at the molecular level, the air dissolved in the heat transfer fluid will be able to escape through the wall of the exchanger. This property also causes a slight drop in pressure.

Membrane effect:

The thermal inertia difference between the DualSun heat exchanger and the heat transfer fluid causes pressure variations according to temperature variations. Due to its relative flexibility, the DualSun heat exchanger can expand or contract. In contact with the atmosphere, it thus behaves like a membrane and allows the relative pressure to be balanced.

NOTE

The physical properties of the DualSun SPRING heat exchanger cause a drop in pressure and allow pressure variations to be absorbed according to temperature variations. The installation of an expansion vessel is thus not necessary.

DualSun however recommends the installation of an expansion vessel, renamed filling vessel, for installations with more than 12 panels so as to improve the hydraulic filling and compensate for the gradual bleeding of air with coolant.

The method of sizing and setting of the DualSun filling vessel [64] can be found in the appendix to this document.

Type of heat transfer fluid to be used:

In order to have good protection against freezing, we recommend using a heat transfer fluid of the glycol water type, the concentration of which should be chosen according to the location of the installation:

Glycol concentration	30%	40%	50%
minimum temperature	-13°C	-23°C	-32°C

For direct swimming pool heating installation, it is essential to drain the installation before the arrival of the first frosts and to respect the recommendations of the hydraulic diagram allowing complete emptying of the panels.

2.1.2. Recommended hydraulic flow rates for the DualSun SPRING panel

Nominal average operating flow rates:

Application	DHW*	Pool discharge / heat pump coupling**	Direct pool heating
Nominal flow (L/h/panel)	60	100	200

* DHW: Domestic Hot Water

** Pool discharge / heat pump coupling: Pressurized system with pool heat exchanger or heat pump

Recommended minimum filling flow rate:

- Panel in portrait mode: 200 L / h / panel
- Panel in landscape mode: 250 L / h / panel

Maximum allowable flow rate: 400 L / h / panel

WARNING

The choice of flow rate directly impacts the hydraulic pressure

When filling the hydraulic circuit, a flow rate increase implies a pressure increase.

2.1.3. Maximum allowable pressures for the DualSun SPRING panel

CAUTION

It is imperative never to exceed the following pressures in DualSun panels:

Maximum operating pressure = 1,5 bar

Maximum filling pressure = 2 bar

The maximum filling pressure corresponds to the allowable pressure in the panels, to purge correctly the air during hydraulic commissioning.

The pressure can be raised to 2 bar for only a few minutes.

The maximum operating pressure corresponds to the maximum pressure in the panels at the time of concluding the hydraulic commissioning.

Add the static pressure corresponding to the height (H) of the installation to adjust the operating pressure with the manometer of the solar station

P = 1,5 + H/10 [bar]

IMPORTANT

At the start of hydraulic filling, so as to avoid a thermal shock in the panels with the flow of the first liters of heat transfer fluid, **it is important to limit the flow to 1 L/min/panel until reaching a temperature in the panels between 10° C and 45° C.**

In this temperature range, it is then possible to reach the pressures indicated above.

CAUTION

As explained in chapter Technical characteristics of the DualSun SPRING panel [7], the mechanical relaxation of the heat exchanger Polypropylene causes a drop in pressure.

The pressure at the level of the SPRING panels stabilizes at atmospheric pressure at the end of relaxation. Thus the operating pressure at the solar station corresponds to the static pressure of the installation, ie H / 10, when the panels are located above the solar station.

This phenomenon is normal and the good functioning of the installation can be verified by checking that the service flow is maintained.

☐ **If the flow rate is significantly lower than the flow rate set at the time of commissioning**:

A leak check in the hydraulic circuit or at the level of the panels is then necessary.

☐ **If the flow rate is in accordance with the flow rate set at the time of commissioning**:

This means that the circuit is waterproof. **Do not add heat transfer fluid**. This risks generating a new mechanical relaxation of the exchangers. **Repeated pressurization of the hydraulic circuit risks damaging the heat exchangers of the SPRING panel.**

2.2. General recommendations

2.2.1. Handling

DualSun modules should be handled like any glass product. To avoid accidents, injuries, or damage to the module during work, the following precautions must always be observed:

- Do not step on the modules.
- Do not drop anything on the modules.
- Protect the modules from possible scratches on the front and rear sides
- Do not exert mechanical tension on the connectors.
- Always lift and transport the modules with both hands and never use the junction box as a carrying handle.
- Never press on the exchanger part of the panel, you would damage it.

2.2.2. Transport

In order not to risk damaging the modules during transport, the following instructions must be observed:

- Transport the stacked modules vertically, with a separator supported by the frame of each module.
- Do not remove the original packaging until the time of installation.
- Do not apply mechanical pressure to the modules (for example, do not fasten the modules with a strap, or else do not place any object on the surface of the modules).

2.2.3. Storage

During storage, to avoid any accident or damage to the modules, the following instructions must be observed:

- Store the modules vertically.
- Do not store modules on the edges, on a corner, or on an uneven surface.

- Do not place any object on the surface of the modules.
- When choosing a suitable storage location, make sure that:
  - The location is dry and cool,
  - No object can fall on the module and thus damage it.

WARNING

If a DualSun module is damaged or broken, it must be replaced. Never install a damaged module.

2.3. Technical considerations

Throughout the year, the system is exposed to external weather and natural conditions (sun, wind, rain, hail, snow, thunderstorms, dead leaves, dust, bird droppings, etc.) which influence the performance and service life of the modules. To extend the service life of the modules and ensure proper operation of the installation, important factors and adjustment parameters must be considered:

2.3.1. Static roofing requirements

The solar installer must ensure that the roof structure can carry the additional weight of the hybrid system.

2.3.2. Angle of inclination

The optimal mounting position of the DualSun solar panels corresponds to an angle of incidence of the sun's rays of 90 ° relative to the surface of the panels (i.e. perpendicular to the panels). To optimize the output of the installation, the panels must be installed with the optimal orientation and angle of inclination. These positioning angles depend on the geographic location of the installation and can be calculated by a qualified solar installer. Wherever possible, the panels of a group must have the same orientation and the same inclination in order to avoid any underperformance of the system due to inconsistent productions.

DualSun recommends a minimum tilt angle of 5 ° from the horizontal to reduce the clogging effect.

The cleaning frequency should be increased for modules installed with a very low angle of inclination from the horizontal.

2.3.3. Wind and snow load

2.3.4. System location

The overall yield of the photovoltaic system in series is always limited by the module delivering the lowest power. Different factors can influence the performance of a module (shading, different orientations, fouling ...) and these impact the entire system.

Therefore, it is necessary to study the layout to avoid a shading effect on the modules in series.

In addition, all panels must be mounted with the same orientation. It is advisable to align all the modules to the solar noon, to obtain optimal performance.

DualSun suggests installing the modules in areas where the temperatures are between -20 ° C and + 50 ° C, which corresponds to the minimum and maximum monthly average temperatures, in accordance with IEC 60364-5-51. The extreme operating temperatures of the modules are between -40 ° C and + 85 ° C.

In regions with heavy snow cover and exposed to strong winds, the modules must be mounted in such a way as to ensure sufficient nominal resistance and in accordance with local regulations.

Certain operating environments are not recommended for DualSun modules, and **are excluded from the DualSun Limited Warranty**:

- No panel should be mounted on a site where it may be exposed to direct contact with :
  - salt water
  - acid rain
  - active chemical vapors or any other aggressive environment
- DualSun modules must not be installed near flammable liquids, gases, hazardous materials or on any type of vehicle.
- It is recommended to install the photovoltaic modules at altitudes below 2000 m

2.3.5. Types of mounting

The fixing of the modules must be done at least in 4 points distributed on the planned zones specified in the paragraph Installation areas on the rails of the mounting system [15]

In-roof assembly

This assembly is not possible with our SPRING panels and .

On-roof assembly

The modules can be mounted on a frame designed to support the photovoltaic panels. This framework must be able to withstand the wind and snow loads occurring in the geographical area of the installation. When fastening and connecting the system to the building, it is necessary to avoid damage or destruction of the roof covering in order to maintain optimum resistance against rain and moisture.

WARNING

The instructions given in the installation guide for the mounting system must be followed for proper installation.

2.3.6. Protection against fire / explosion

Do not install the DualSun modules in the vicinity of highly flammable gases, vapours, or dust (e.g., next to a gas station or containers). The national and local fire prevention standards and regulations must be respected during installation. For installations located on a roof, the modules must be mounted on a fire-resistant roofing cover adapted to the application.

The DualSun modules have a fire resistance of class C according to standard IEC / EN 61730-2.

3. Mechanical installation

CAUTION

The management and installation of DualSun panels and the equipment making up the complete installation must be carried out by trained and qualified personnel. The system must be assembled and operated in accordance with the instructions provided, in accordance with the local and national health and safety, and risk prevention regulations.

During assembly and operation of the system, no unauthorized person may be on the roof or around the installation.

3.1. Installing DualSun modules

The DualSun FLASH and SPRING panels can be installed both in portrait and landscape.

DualSun does not provide the module fixing system: for proper installation, refer to the installation instructions for the chosen fixing system.

NOTE

The list of mounting systems compatible with DualSun modules is available in the "Mounting systems compatibility" document in our online library

CAUTION

Even when solar radiation is low, the photovoltaic system produces direct current (DC). This DC current flows from the module to the inverter, do not handle the module or connections without protection.

The modules are qualified for use in class II and comply with standards IEC / EN 61215-2 and IEC / EN 61730-1. These standards concern PV modules for use on buildings, or on ground structures.

Artificially concentrated solar radiation must not be directed onto the module.

The frame thickness and the dimensions of the SPRING panel are identical to photovoltaic panels. It adapts easily to photovoltaic mounting systems; however, it is necessary to ensure the positioning of the hoses in relation to the mounting system frame and to the roof covering surface.

The mounting system must have a flat surface for mounting the panel and must not cause twisting or stress on the panel, even in case of thermal expansion.

We also remind that the waterproofing of the roof is not ensured by the panels but by the panels mounting system and that the drainage must be provided.

It is necessary to provide a space between the frame of the panels and the structure or the floor to avoid damage to the cables and hydraulic fittings.

The panel mounting systems must be installed only on buildings that have been formally validated for structural integrity, and which have been considered capable of supporting the additional weight of the panels and mounting systems, by a certified building specialist or engineer.

The supplier of the mounting system must take into account the galvanic corrosion which may appear between the aluminium frame of the panels and the mounting system or the grounding parts if they are made of different metals.

The module is only certified when its original frame is completely intact. Do not remove or modify the module frame in any way. Drilling additional mounting holes is likely to damage the module and reduce the strength of the frame, and thus is not allowed.

The use of flanges and fasteners with additional grounding bolts or grounding connectors shall be in accordance with this safety and installation instruction manual and according to the conditions of Grounding and lightning protection [28].

The modules can be installed according to the following methods:

1. **Frame holes:** Attach the module to the structure using the factory-made mounting holes. It is recommended to use four M8x16 mm stainless steel screws with bolts, washers and lock washers for each module. The maximum tightening torque of the bolts is 24 N.m.

   CAUTION

   This method is only valid on the FLASH photovoltaic panel range. It is therefore not valid for our range of hybrid panels.

2. **Calipers or clamps** : the brackets can be mounted on the longitudinal (longest side) or lateral (shortest side) side of the module. The areas allocated to these clamps are specified in Installation areas on the rails of the mounting system.

   When installing the clamps, please consider the following measures:

   - Do not bend the frame of the module.
   - Do not touch the glass or cast shadows on the front glass.
   - Overlap in depth of the clamps on the frame: between 7mm and 12 mm
   - Minimum clamps width: 50mm.
   - Minimum Clamps thickness: 3mm

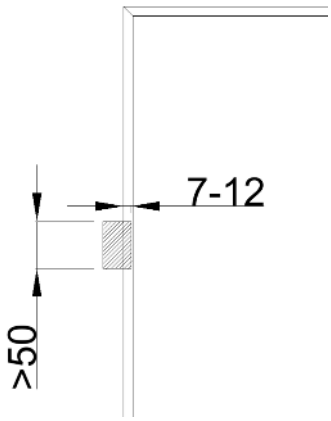

   Installers must ensure that the resistance of the clamps is sufficient given the maximum pressure to which the module can be exposed. The clamps are not supplied by DualSun.

IMPORTANT

It is important to make sure that the clamping brackets do not distort the top of the aluminium frame of the DualSun panel, this may weaken or even break the glass.

CAUTION

The tightening torque of the clamps must not exceed 24 N.m.

WARNING

The compatibility of the mounting system with the modules must be assessed before any installation, especially when the system does not use brackets or clamps.

3.2. Assembly specifications

3.2.1. Installation areas on the rails of the mounting system

DualSun panels are certified for a maximum load of 5400 Pa positive (snow) and -2400 Pa negative (wind) in a standard configuration with four clamps. For the details of the loads according to the installation modes, please consult the table below. The technical name of your panel can be found on the technical sheet.

All dimensions specified in this table are in **mm.**

Panels : DSTNxxxM12-B320SBB7 ; DSTIxxxM12-B320SBB 7		
Installation method	4 clamps on the long side	4 clamps on the short side
Installation	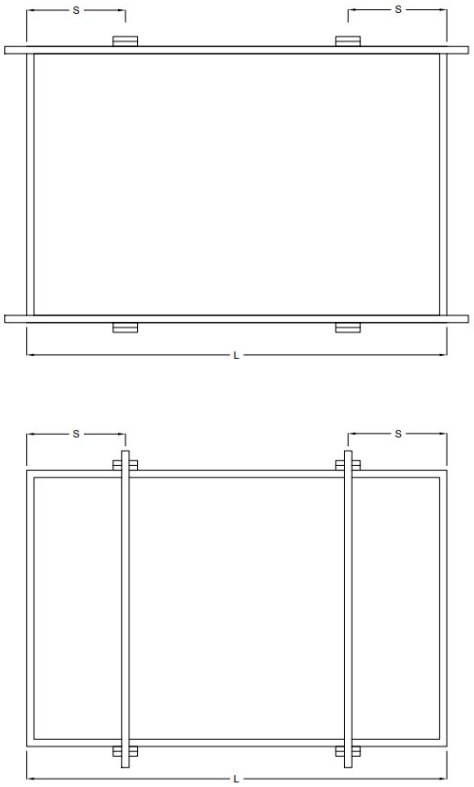	
Position of clamps	330<S<430	0 < H < 300
Maximum certified load	6600Pa positive, 3600Pa negative	2400Pa positive, 2400Pa negative

Panels : DSxxxG1-360SBB5 ; DSTNxxxG1-360SBB5 ; DSTIxxxG1-360SBB5		
Installation method	4 clamps on the long side	4 clamps on the short side
Installation	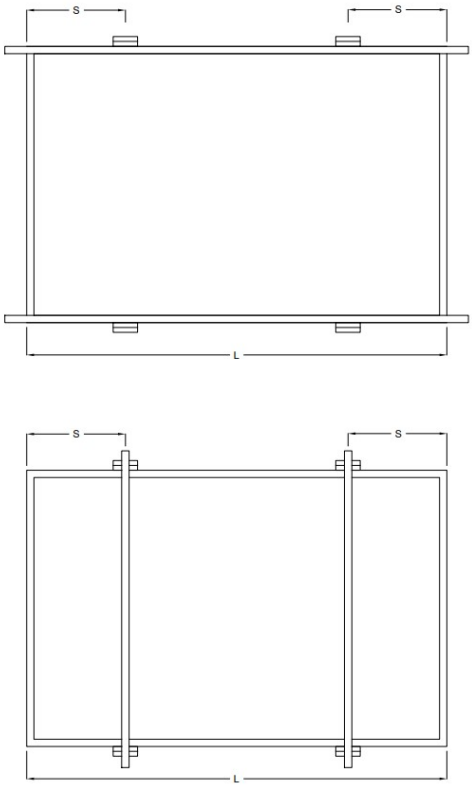	
Position of clamps	280 < S < 380	0 < H < 300
Maximum certified load	5400Pa positive, 2400 negative	2400Pa positive, 2400Pa negative

CAUTION

Do not interface the rails of the laying system with the hydraulic connections, the areas of which are delimited in the plan above.

WARNING

No element fixed on the rails can be in contact with the rear face of the panel. For example micro-inverter or optimizer.

Use a mechanical mounting element suitable for the rails of the installation system to fix the micro-inverter or the optimizer in such a way as to ensure a minimum gap of 19 mm between the roof and the micro-inverter or optimizer and of 13 mm between the back of the SPRING module and the top of the microinverter or optimizer. See assembly example below:

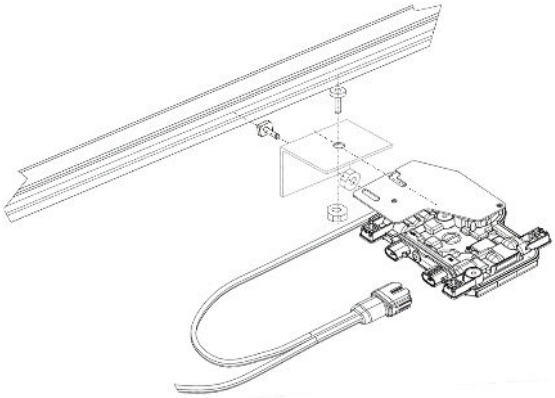

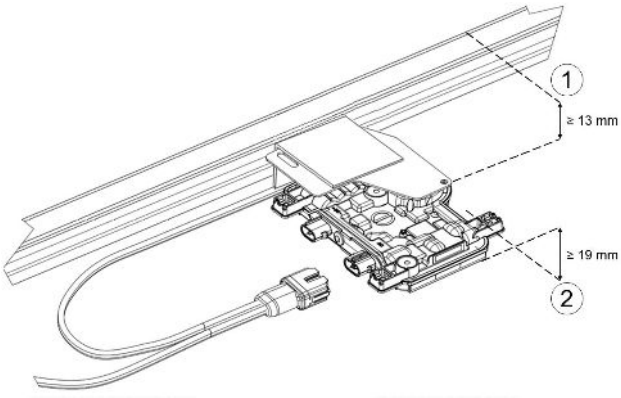

1. Bottom frame edge of SPRING panel
2. Roof

3.2.3. Raising the SPRING panels relative to the roof

It is necessary to ensure that the size of the hydraulic connections corresponds to the distance allocated by the laying system, between the surface of the roof and the lower edge of the module frame, which will be in contact with the mounting system.

Depending on the hydraulic nominal flow, two types of fittings have been designed. Their size at the rear of the module is shown below.

SPRING 425

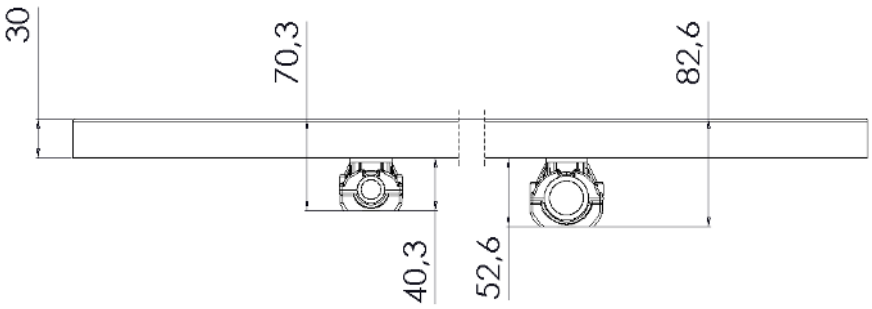

SPRING 375 and previous

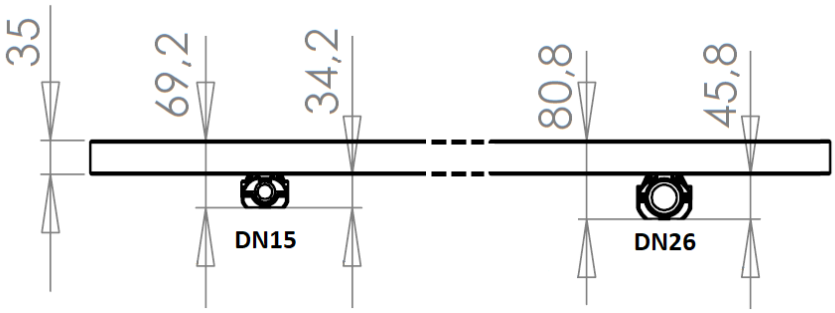

CAUTION

The bulk of the hydraulic fittings on the rear side of the DualSun SPRING panels is to be considered carefully to avoid contact of the fittings with the surface of the roof cover.

The characteristics of the flexible pipes of the hydraulic connections are to be taken into consideration for their routing between panels and towards the transfer lines:

	DN15	DN26
Dint / Dext (mm)	15 / 21	26 / 32
Bending radius - Rb (mm)	88	140

3.2.4. Possible laying configurations with hydraulic connections

To facilitate their routing in a maximum of configurations, the DualSun hydraulic connections have been developed to allow a connection in portrait or landscape mode, it is thus possible to adapt the hydraulic connections according to the desired layout and also bypass obstacles between the panels and the roof.

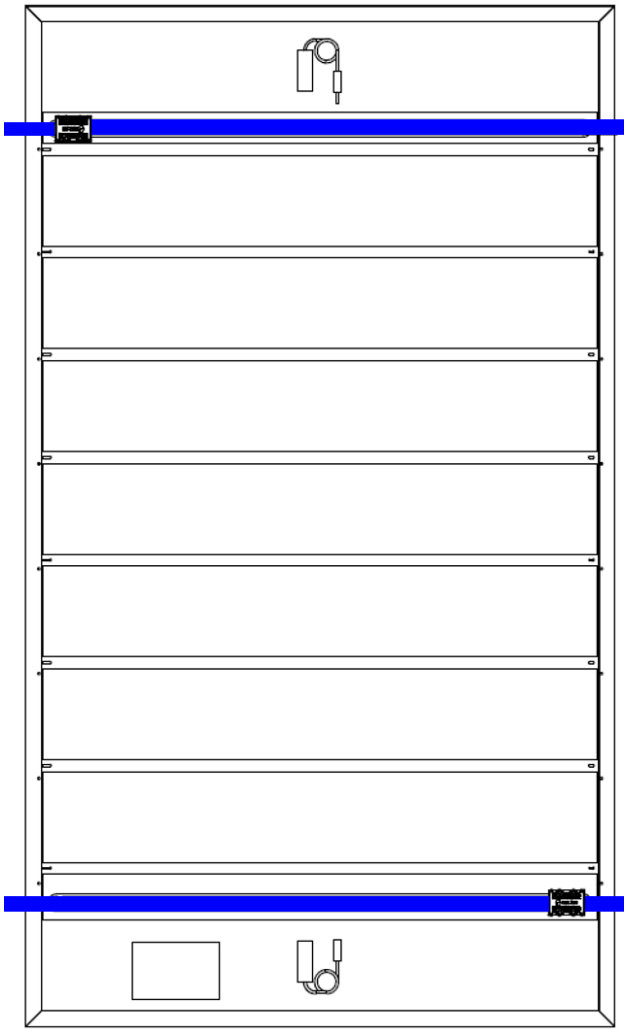

Installation configuration 1

Portrait panel / Portrait link

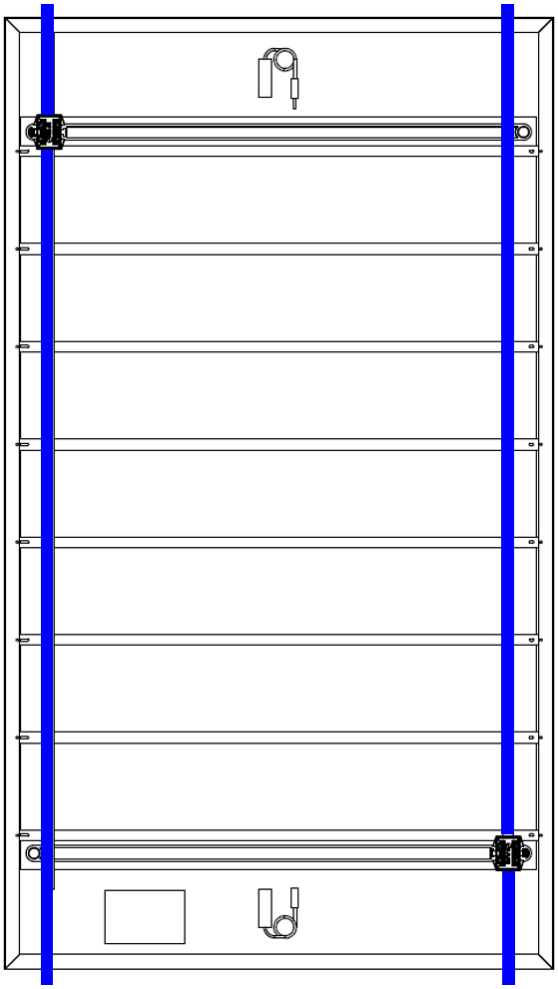

Laying configuration 2

Portrait panel / Landscape link

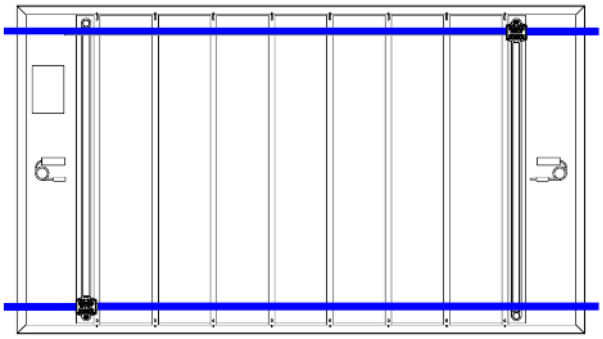

Installation configuration 3

Landscape panel / Landscape link

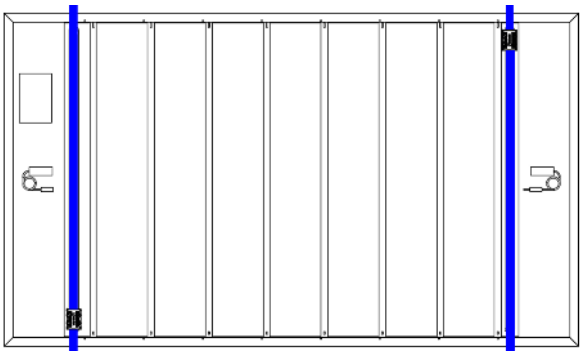

Installation configuration 4

Landscape panel / Portrait link

Thus, the hydraulic connections can be oriented so as to avoid the rails of the mounting system or to adapt to the type of roof, in particular on trapezoidal sheet metal roof.

NOTE

Claws to be fixed on the frame return of the SPRING panels to keep the hydraulic hoses as close as possible to the frame are available in the DualSun inlet / outlet fittings kit.

Number of claws to be fixed per side according to the routing of the hoses:

- 2 on the short side
- 2 or 3 on the long side

IMPORTANT

Be sure to install the panels **DualSun SPRING 375 and 425** with the junction box on the same side on each hydraulic line to connect the DualQuickfit hydraulic links.

Correct assembly SPRING 375- Junction boxes on the same side:

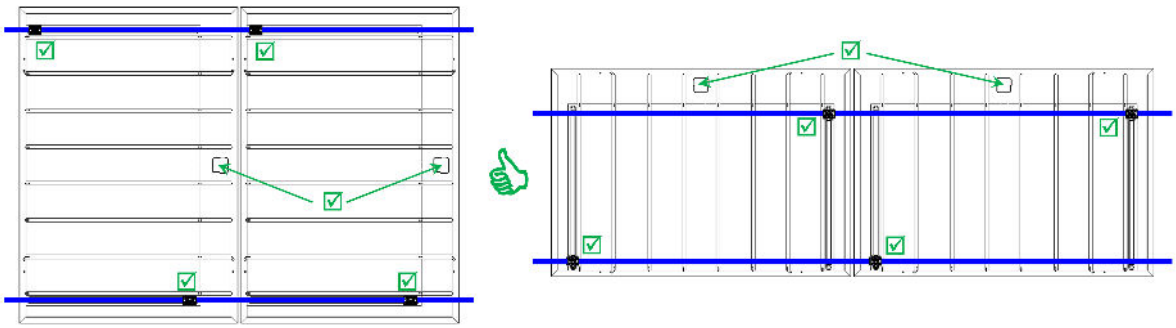

Incorrect assembly SPRING 375- Junction boxes in opposition:

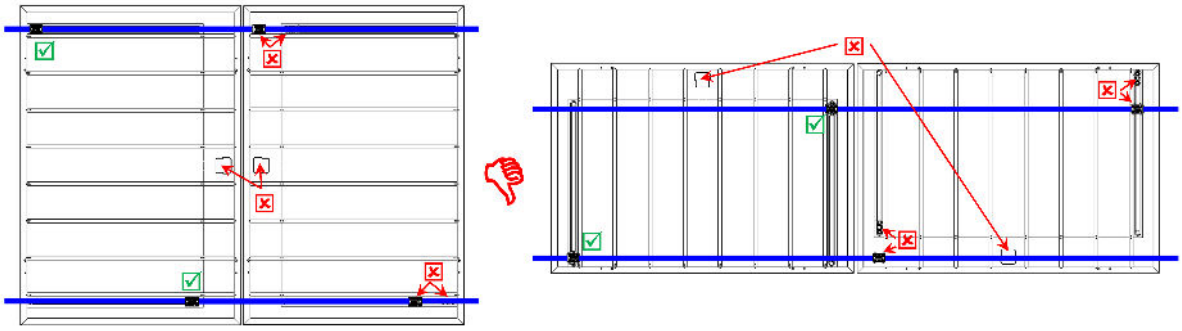

3.2.5. Installation of SPRING panels on a trapezoidal sheet metal roof

In the case of a trapezoidal sheet metal roof, the hydraulic connections can be positioned in a corrugation recess to limit the height of the modules.

The flexible hoses can either run perpendicular to the corrugations if the installation system raises the modules higher than the hose diameters, see Raising the SPRING panels relative to the roof [18], or run in the corrugation recess in the opposite case.

A detailed layout plan is then mandatory to ensure that the hydraulic connections do not interfere with the roof covering.

1. **Checking the panel raising and positioning of the hydraulic links**
   a. ***DN15 fitting***

      See characteristics of the DN15 hydraulic hose indicated in chapter Raising the SPRING panels relative to the roof [18].

      The minimum elevation of the module with regard to the corrugation crest is 22 mm.

      In this case, the edge of the hydraulic fitting can be placed 34 mm to the edge of the corrugation crest.

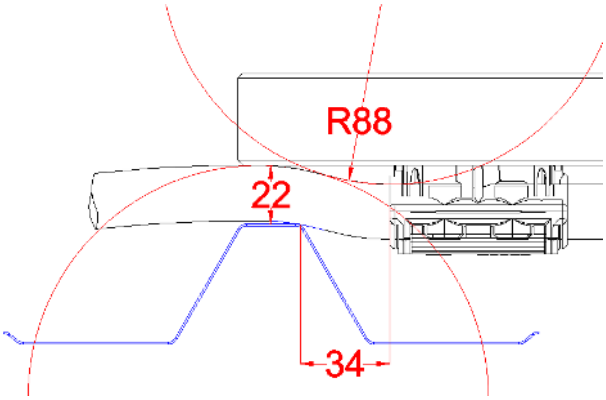

   b. ***DN26 fitting***

      See characteristics of the DN26 hydraulic hose indicated in chapter Raising the SPRING panels relative to the roof [18].

      The minimum elevation of the module with regard to the corrugation crest is 36 mm.

      In this case, the edge of the hydraulic fitting can be placed 60 mm to the edge of the corrugation crest.

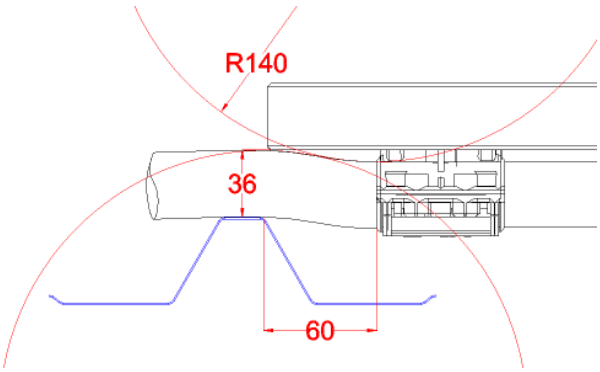

2. **Checking the roof layout**

   The positioning of the first module depends on the corrugation crest routing detailed above. Then check that each DualSun fitting is correctly positioned in the corrugation recess, according to the width of the inter-panel clamps, respecting the minimum distances for the routing of the hydraulic links through the corrugation crests.

   a. ***Portrait layout***

b. ***Landscape layout***

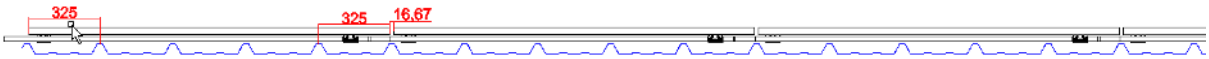

NOTE

Sheet metal roof with 333 mm corrugation length : If possible select an inter-panel distance of 16.67 mm for xxxM-60-3BBP modules and 20.67 mm for DSTxxxG1-360SBB5 modules and place the end of the module at 325 mm from the centre of the corrugation crest. The position of the modules will thus be identical with respect to the corrugation crests over the entire layout.

3. **Checking the routing of the hydraulic links**

a. ***Routing perpendicular to the corrugations***

Installation configurations 1 and 3, see Possible laying configurations with hydraulic connections [19]

The previous points allow to check:

- the routing of the hoses perpendicular to the corrugations according to the characteristics of the DN15 or DN26 hoses
- the elevation height of the modules,
- the positioning of the hydraulic links in relation to the corrugations

b. ***Routing parallel to the corrugations***

Installation configurations 2 and 4, see Possible laying configurations with hydraulic connections [19]

Routing through rails may occur according to the mounting system. In this case it is possible to run the hydraulic links beneath or from the side of the rails. It is necessary to ensure that:

- The height between the rails and the roof surface is greater than the external diameter of the flexible hoses indicated in chapterRaising the SPRING panels relative to the roof [18]
- The bending radius of the flexible hose is greater than the minimum bending radius to avoid the rails, see characteristics of the hydraulic hoses indicated in chapterRaising the SPRING panels relative to the roof [18]
- The rails are at a sufficient distance from the hydraulic fittings to comply with the minimum bending radii of the flexible hoses within the permissible fixing areas, see chapter Installation areas on the rails of the mounting system

i. Rails avoidance in portrait

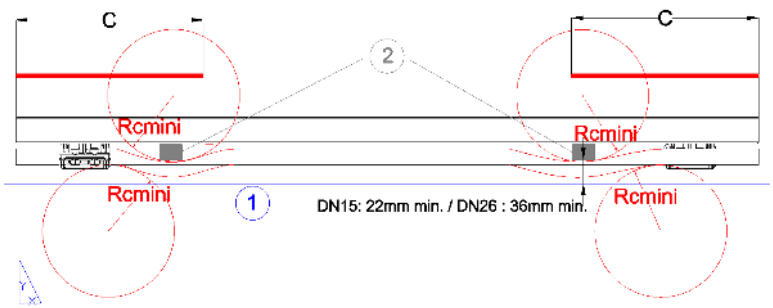

ii. Rails avoidance in landscape

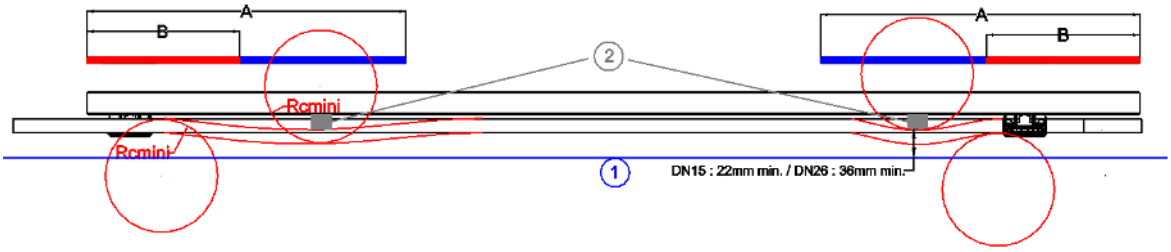

(1) = Roof surface

(2) = Rails of the mounting system. To move as far away as possible from the hydraulic fittings within the limit of the authorized fixing zone, see values A, B and C in chapter Installation areas on the rails of the mounting system, to respect the minimum bending radius (Rc_{mini}) of the hydraulic hoses, see chapter Raising the SPRING panels relative to the roof [18].

4. Electrical Installation

4.1. Electrical connection

The nominal electrical parameters Icc, Vco and Pmax of the modules are determined under standard test conditions STC (standard testing condition): illumination of 1000 W/m² with a spectrum of 1.5 AM and a cell temperature of 25°C. These values may vary from +/-3%.

NOTE

Under normal conditions, a photovoltaic module is likely to be exposed to conditions which produce more current and / or voltage than what is measured under standard test conditions. Therefore, **the maximum values of I_{CC} and V_{CO} noted on the module should be multiplied by 1.25 when determining the rated voltage of the components**, the nominal current of the conductors, the size of the fuses, and the size of the control tools connected to the PV output

Wiring in series

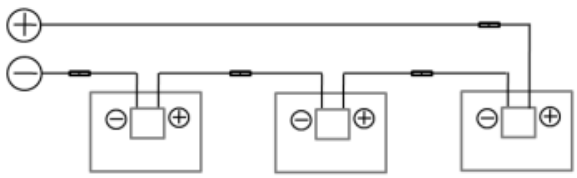

Wiring in parallel

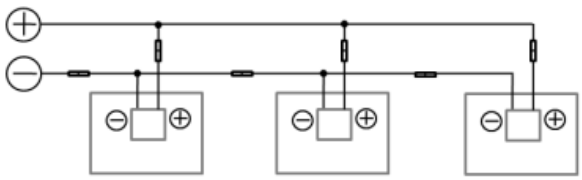

Serial / parallel wiring

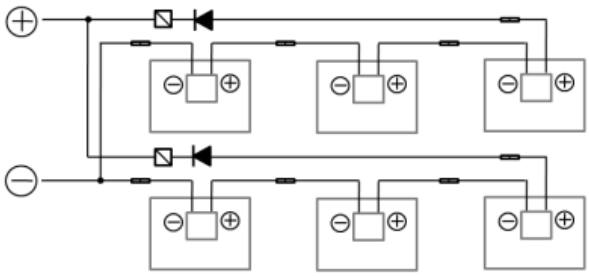

Diode Overcurrent protection Connector

1. **Wiring in series**

   To wire modules in series, the maximum number of connectable modules must be determined. For this it is necessary to determine the maximum tension of the string. This is calculated by adding the open

circuit voltage (V_{CO}) of each module when the ambient temperature is at its minimum value. Apply the temperature coefficient to know the V_{CO} value at the temperature considered.

The maximum open circuit voltage of the string should never exceed the maximum system voltage. See module data sheet.

Determination of the maximum number of modules that can be connected in series:

$$N = Maximum\_voltage\_system / 1.15.V_{co}$$

Where:

- N = Maximum number of modules in series
- V_{co} = open circuit voltage of each module, when the ambient temperature is at its minimum value (refer to the product technical sheet)

WARNING

If additional PV modules must be installed in string with DualSun modules, their power and current must be equal to those of DualSun panels within the limits of manufacturers' tolerances

2. **Wiring in parallel**

For DualSun modules connected in parallel, a corresponding overcurrent protection must be used. To this end, a DC voltage fuse must be used to avoid reverse current. Refer to the maximum reverse current value in the product data sheet to determine the protection value. In addition, the operating conditions and design rules of the inverter manufacturer must be observed.

CAUTION

Refer to the instructions of the inverter used

WARNING

For modules connected in parallel, only modules with the same nominal voltages will be used

The electrical installation must be carried out by qualified personnel and in accordance with current safety standards and IEC / EN 61730.

Refer to the grid operator requirements when installing the system.

The installation must be equipped with a circuit breaker to isolate at the same time all the cables that are not grounded by a minimum spacing of 3 mm at the contact level.

4.2. Position of the micro inverter for the FLASH 425 and the SPRING 425

When fixing the micro inverters on the roof structure, it is important to take care to anticipate the length of the cables.

This requires placing the micro inverter close to the edge of the panel (~5cm maximum). Thus when connecting the panel, when it is on the edge, the distance between the micro-inverter and the box will be minimal and the cables will be slack.

The side depends on the assembly direction of the panels. If you start with the leftmost panel on the line, you have to put the panels on the left edge, so align the micro inverters with the left side of the panel. To be reversed if the panels are added from right to left.

4.3. Electrical fittings, cables and diodes

The DualSun solar modules are supplied with cables, connectors, and a pre-equipped junction box. Before installation, check that the plugs and connections are not damaged.

Connect the positive plug of a module to the negative plug of the next module; see identification of the polarity of the MC4 connectors below:

To connect the modules, special solar cables with a minimum diameter of 4 mm^2 as well as the appropriate connectors must be used. These cables must be UV and wear resistant. Avoid leaving cables exposed to the elements or place them in a protective sheath.

Respect a minimum bending radius of 40 mm.

When connecting the connectors, it is important to ensure that they are connected in a watertight manner (minimum IP67).

When handling these cables, make sure that the tools used are dry.

All modules are supplied with pre-installed bypass diodes to minimize hot spots and module current losses in the event of (partial) shading.

CAUTION

Never connect or disconnect a live circuit

CAUTION

Never open the junction box

The junction box of the DualSun module contains bypass diodes which are in parallel connection with the cell wires. If a hot spot occurs locally on one or more cells, the diode will enter into service to prevent the main current from flowing through the hot cells in order to limit overheating and loss of performance of the module. However, the bypass diode is not the overcurrent protection device.

If the LED appears to be out of order, the installer or system service agent should contact DualSun.

The maximum rating of a fuse connected in series with a cell chain is generally 15A, but the specific rating of the module can be found on the product label and in the product data sheet.

The diodes which are used as blocking diodes must have:

- Maximum average value tolerable by the junction [IF (AV)] above the maximum system current at the highest operating temperature of the module.
- Maximum repetitive peak value tolerable by the junction [VRRM] above the maximum system voltage at the lowest module operating temperature.

4.4. Grounding and lightning protection

CAUTION

The evaluation and design of the earthing and lightning protection system of PV installations must be carried out by trained and qualified personnel. It is imperative to refer to the local regulations in force to comply with specific requirements

DualSun modules must be grounded with prongs, lugs or other suitable means.

Grounding can be done through the holes made for this purpose as part of each module. These holes allow the earth cable to be attached and connected to the equipotential bonding.

The frame of the panels is delivered with two earthing holes at each corner of the frame.

NOTE

Make sure that the grounding is carried out with the appropriate connections (**stainless steel**), to avoid anodizing or oxidation of the module frame at the hole provided for grounding. The grounding device must be in good contact with the aluminum frame of the module.

Avoid direct contact between aluminum and copper by using an intermediate metal such as stainless steel or tin.

4.5. Indirect lightning strike

The installation must also be protected from indirect lightning strikes. Indeed, the drivers of the system can become inductive if a lightning strike erupts in the vicinity of the installation. To prevent this phenomenon, the

electrical cable loops must be avoided and the surface between the cables must be as small as possible, as can be seen in the graph below:

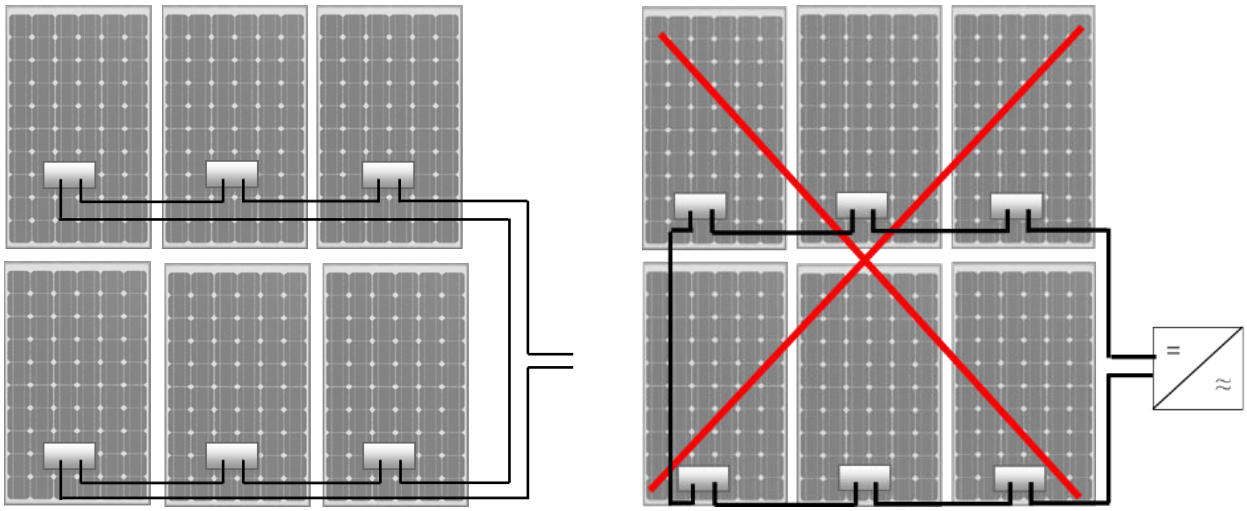

5. Hydraulic installation

The hydraulic installation of DualSun SPRING hybrid solar panels is divided into 4 stages:

5.1. Hydraulic connection of the panels

5.1.1. Inter-panel connection - DualQuickfit links

To connect SPRING panels to each other, DualSun has developed DualQuickfit quick couplings, mounted on flexible lines packaged in the form of crowns.

These flexible lines are pre-assembled with a flexible DN15 or DN26 hose, depending on the nominal flow rate required, see table below, and with DualQuickfit quick couplings, portrait or landscape, depending on the layout of the installation.

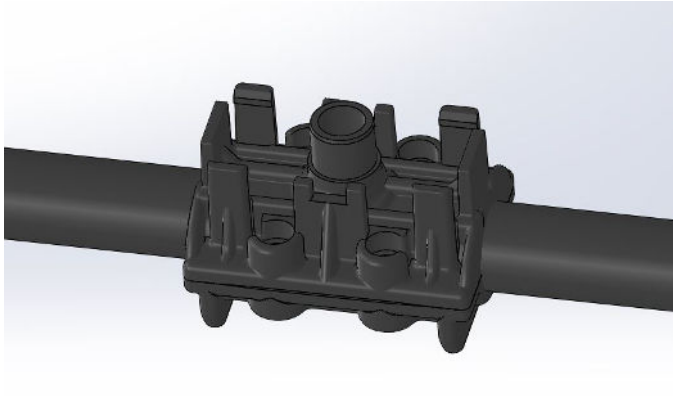

DualQuickfit portrait fitting

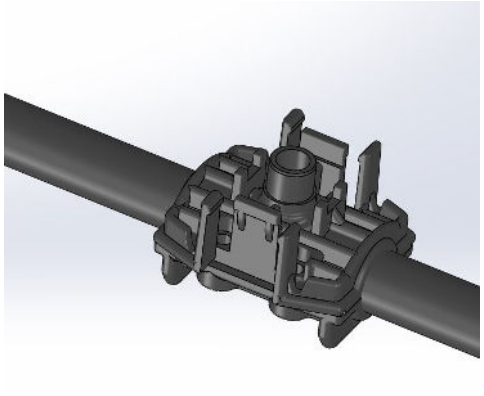

DualQuickfit landscape fitting

Technical characteristics of the DualSun DualQuickfit links:

- **Materials:**

DualQuickfit quick coupling: Polypropylene injected with 30% fiberglass

DualQuickfit hose: EPDM

- **Characteristics of flexible hoses:**

	DN15	DN26
Dint / Dext (mm)	15 / 21	26 / 32
Bending radius - Rb (mm)	88	140

- **Inter-coupling distance of the hydraulic links:**

	Portrait		Landscape	
	DN15	DN26	DN15	DN26
xxxM-60-3BBPN xxxM-60-3BBPI	SPRING 300: 1062 mm	SPRING 300: 1062 mm	1710 mm	-
DSTNxxxG1-360SBB5 DSTIxxxG1-360SBB5	SPRING 375 SHINGLE: 1210 mm	SPRING 375 SHINGLE: 1210 mm	SPRING 375 SHINGLE: 1710 mm	-
DSTNxxxM12-B320SBB7 DSTIxxxM12-B320SBB7	1160mm	1160mm	1960mm	

- **Diameter of the hydraulic links according to the recommended flow rates:**

Flow rate	Portrait	Landscape
DHW = 60 L/h/panel	DN15	DN15
Pool discharge / heat pump coupling = 100 L/h/panel	DN15 / DN26	DN15
Direct pool heating = 200 L/h/panel	DN26	-

5.1.2. Maximum number of panels per hydraulic line

IMPORTANT

To ensure correct filling of the panels during commissioning, **the maximum recommended number of online modules is 7 portrait or landscape**

- **in portrait**
- **6in landscape**

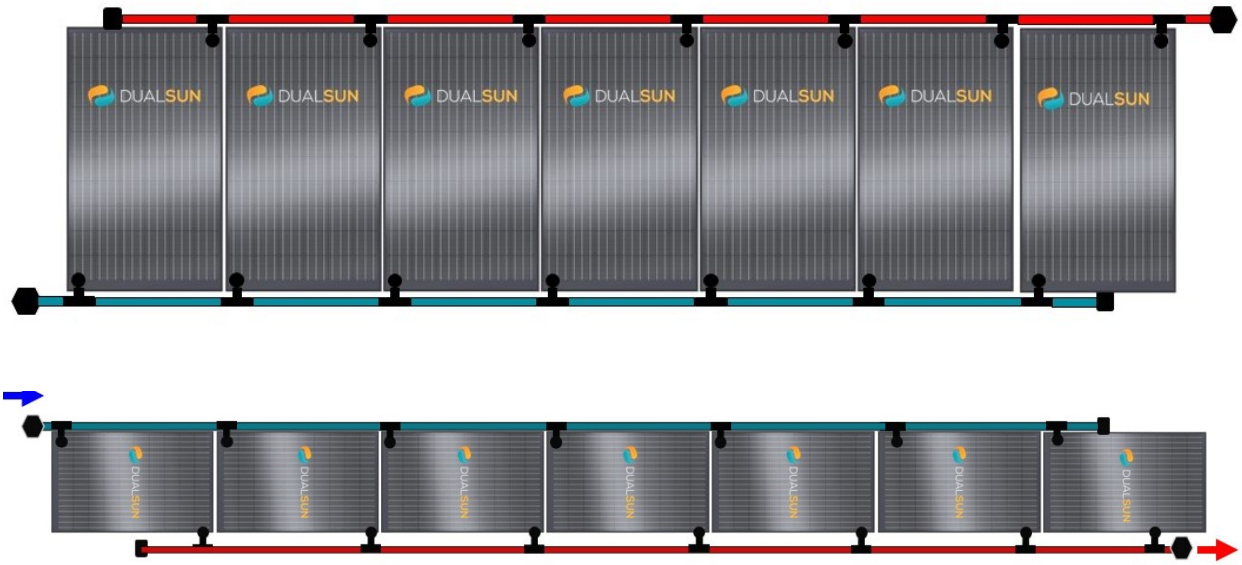

5.1.3. Panel field inlet / outlet fitting

1. **Pressurized system**

   A kit of brass inlet / outlet fittings is used to connect the inter-panel links to the transfer circuit.
   - M3 / 4 " for DN15 inter-panel links
   - M1 " for DN26 inter-panel links

   This kit includes, for a line of panels:

   - 4 corrugated fittings
   - 2 ringed caps
   - 4 hose clamps
   - 2 high temperature fiber O-rings

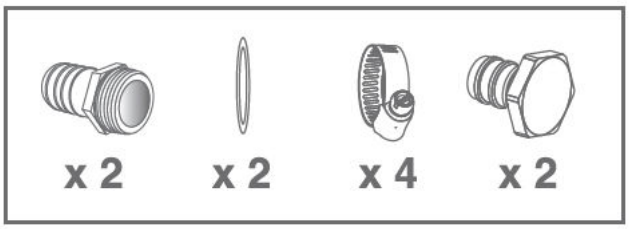

These fittings are installed at the inlet and outlet of each line of sensors.

Place the collar on the hose, insert the corrugated connector in the hose (1), tighten respecting the tightening torque (2).

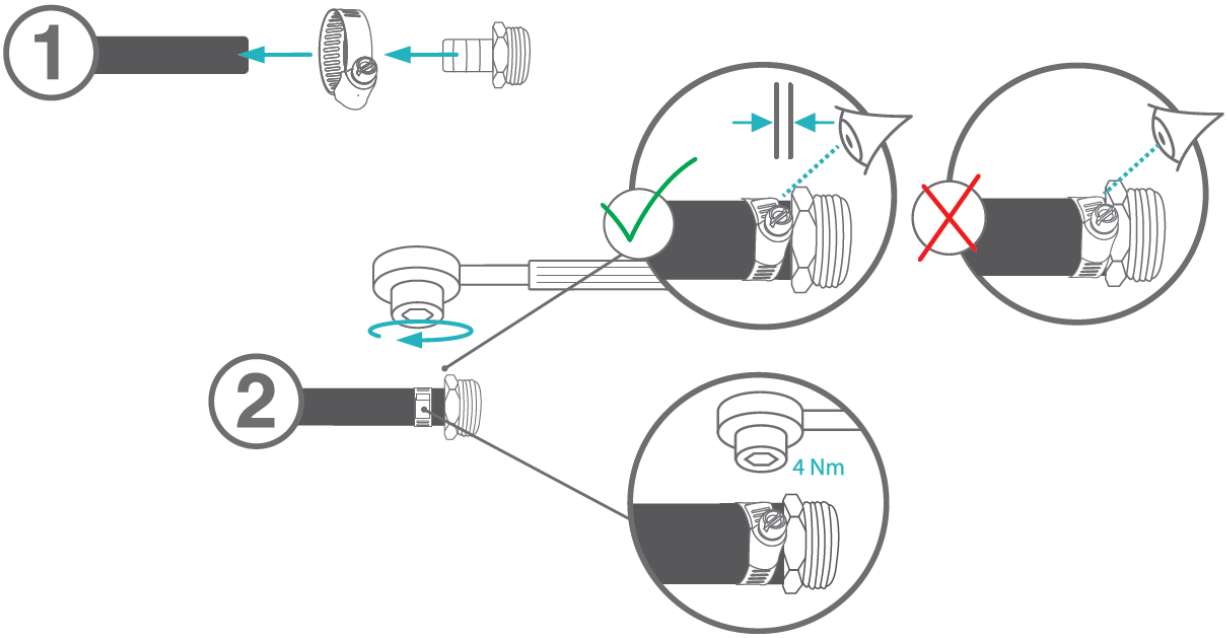

Place the clamp on the hose, insert the plugged barbed fitting into the hose (3). Tighten the clamp respecting the tightening torque. (4).

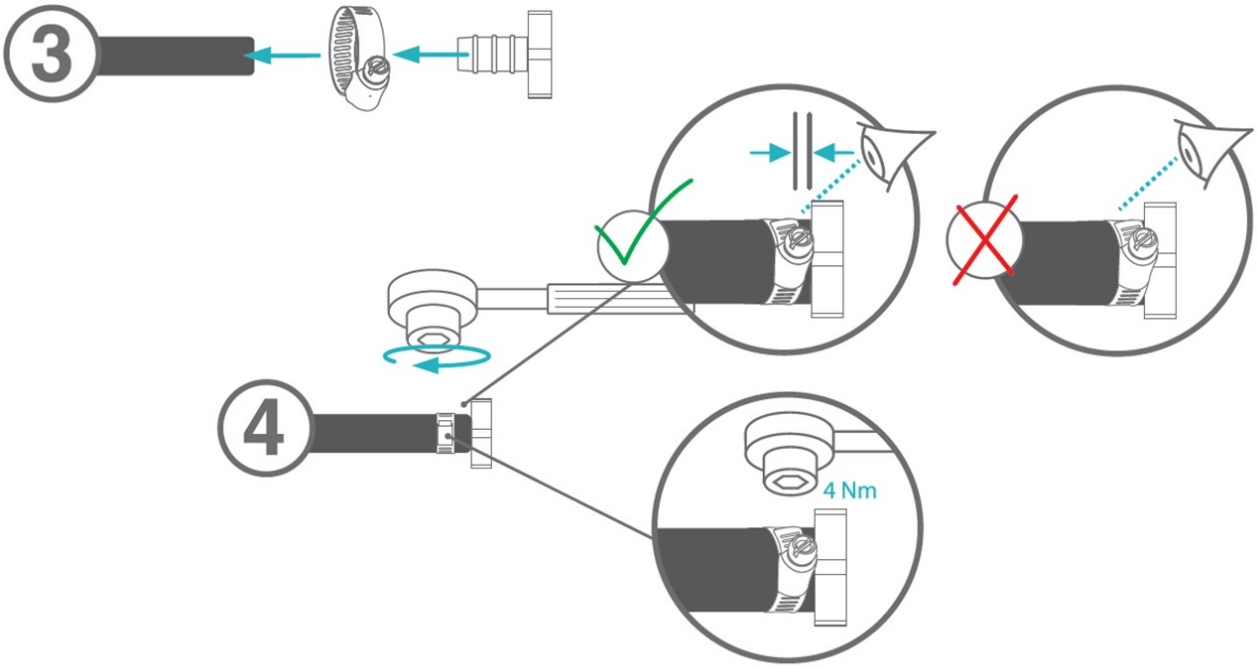

WARNING

Tightening of screw caps = 4 Nm maximum

The inlet / outlet fitting kit is to be installed as specified below:

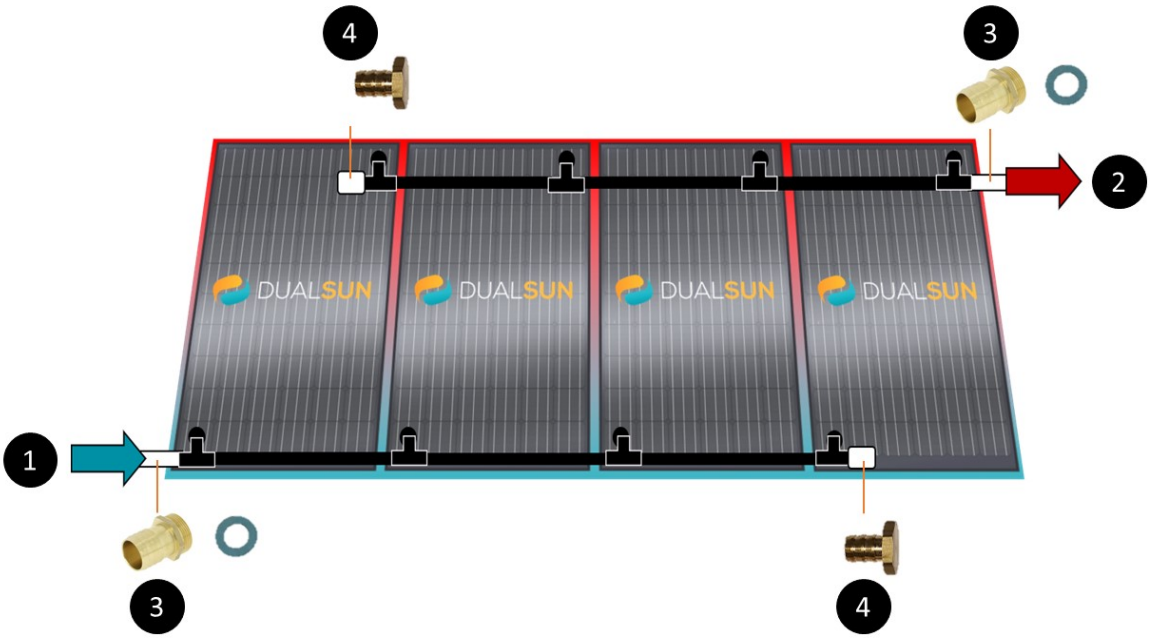

Simplified diagram installation of a hydraulic line with 4 panels in portrait

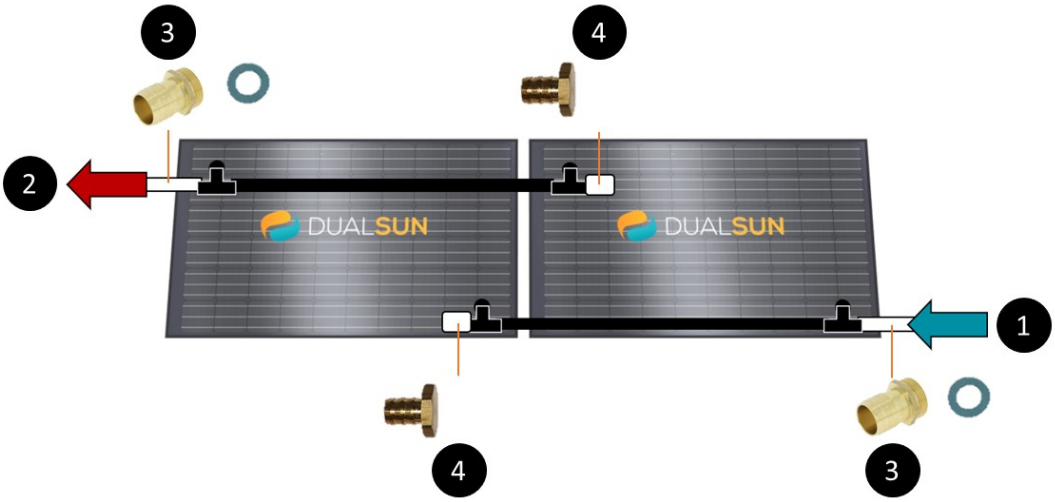

Simplified diagram installation of a hydraulic line of 2 panels in landscape

1. Hydraulic inlet
2. Hydraulic outlet
3. DualQuickfit / Transfer circuit connection
4. DualQuickfit link plug

CAUTION

The fluid must flow from bottom to top in the panels

Respect the hydraulic connection direction (3) at the inlet (1) and at the outlet (2), as shown in the diagrams above and in the table below.

	Hydraulic inlet (1)	Hydraulic outlet (2)
Portrait	Bottom left	Top right
Landscape	Bottom right	Top left

2. **Pool system**

A kit of compression inlet / outlet fittings for the DN26 inter-panel links allows the inter-panel links to be connected to the transfer circuit.

This kit includes, for a line of panels:

- 2 x D32 / 40 mm compression fittings
- 2 x D32 mm compression caps

These fittings are installed at the inlet and outlet of each line of panels.

The inlet / outlet fitting kit is to be installed as specified below:

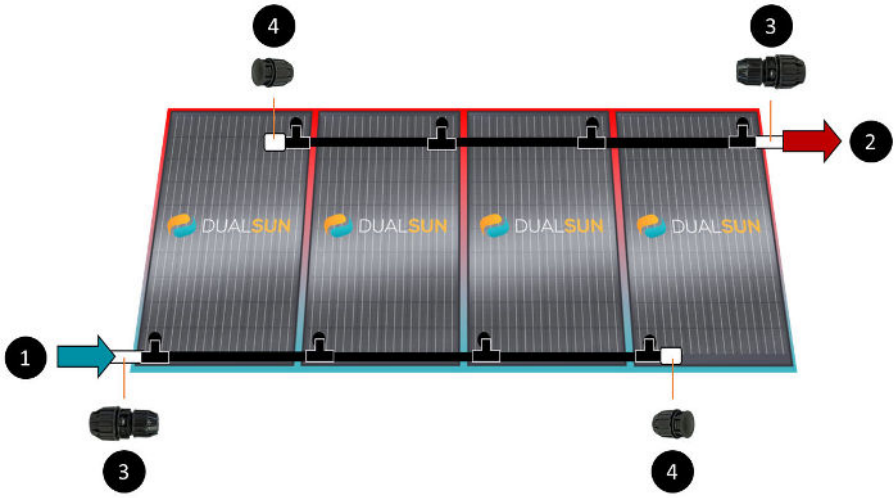

Simplified diagram installation of a hydraulic line with 4 panels in portrait

1. Hydraulic inlet
2. Hydraulic outlet
3. DualQuickfit / Transfer circuit connection
4. DualQuickfit link plug

CAUTION

To authorize the winter draining of the direct pool heating system, the DualSun SPRING panels must imperatively be installed in portrait

The fluid must flow from bottom to top in the panels

Respect the hydraulic connection direction (3) at the inlet (1) and at the outlet (2), as shown in the diagrams above and in the table below.

	Hydraulic inlet (1)	Hydraulic outlet (2)
Portrait	Bottom left	Top right

5.1.4. Installation of DualQuickfit links

When the flexible inter-panel links are equipped with the inlet/outlet connections, they are then easily connected to the Panel manifolds, without tools, as shown below.

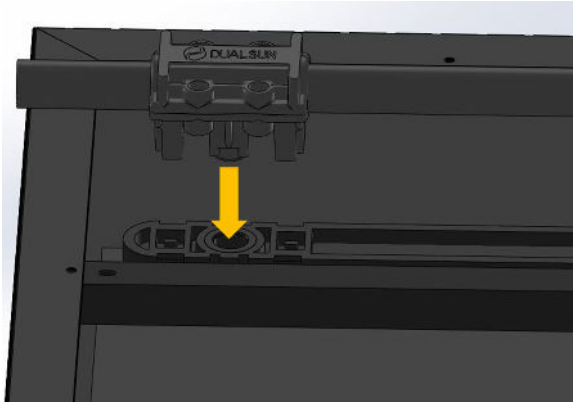

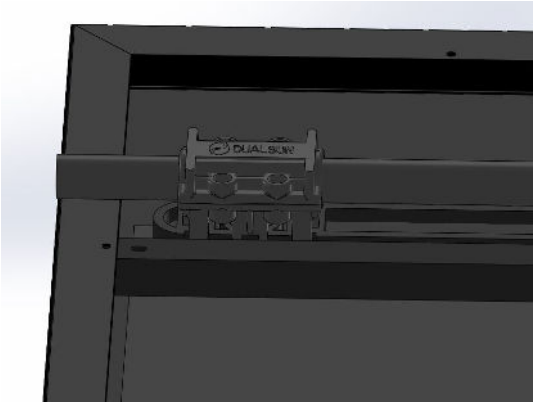

IMPORTANT

Make sure to insert the DualQuickfit fitting straight into the manifold of the SPRING panel

NOTE

On tilted roofs, it is advisable to prepare the inter-panel links according to the roof layout before starting the installation on the roof.

NOTE

Claws to be fixed on the frame return of the SPRING panels to keep the hydraulic hoses as close as possible to the frame are available in the DualSun inlet / outlet fittings kit.

Number of claws to be fixed per side according to the routing of the hoses:

- 2 on the short side
- 2 or 3 on the long side

5.1.5. Heat insulation and protection of DualQuickfit connections

The DualQuickfit inter-panel connections are not insulated. We do not offer a thermal insulation solution because the length and diameter of the connections are small. The exchange surface is therefore very limited and the heat losses are negligible.

DualQuickfit connections in EPDM are UV resistant In addition, the position of the DualQuickfit links, on the rear face of the DualSun Spring panels, protects them from direct exposure to UV rays

5.2. Hydraulic balancing of panel fields

In the case of panel fields, the panel lines can be connected in parallel. To ensure proper thermal operation, the heat transfer fluid must circulate at the same speed in each panel. It is therefore important to ensure hydraulic balancing when several lines of panels are connected to the same hydraulic circuit.

Hydraulic balancing of panel fields for DualSun pressurized system [37]

Hydraulic balancing of panel fields for DualSun solar swimming pool heating system [45]

5.2.1. Hydraulic balancing of panel fields for DualSun pressurized system

IMPORTANT

The installation of isolation valves is necessary for:

1. Improve the bleeding of the air contained in the hydraulic circuit during filling while commissioning: Fill line by line in order to purge the air contained in the circuit more quickly and ensure the proper bleeding of each line
2. Carry out targeted maintenance operations: In the event of a fault on a hydraulic line, locking out the defective line makes it possible to intervene without stopping the installation. Only the faulty line can therefore be drained for maintenance. The filling of the hydraulic line on which the maintenance was carried out must then be carried out by isolating all the other hydraulic lines to avoid injecting air into the general circuit.

NOTE

Optimization for note 2 above:

In the case of an installation on a flat roof or on the ground, with the possibility of handling and supplying energy to a mobile filling pump, it is recommended to install a hydraulic tee fitting with shut-off valve at the inlet and outlet of each hydraulic line. Elements marked (8) in the diagrams below.

The installation of hydraulic T-fittings with shut-off valve thus allows filling only a hydraulic line on which intervention may be necessary, without isolating the rest of the installation.

This solution also allows direct hydraulic filling adjustments to optimize the air purge of the panels.

WARNING

It is recommended to install an automatic air vent fitted with a shut-off valve at each high point of the installation.

It is recommended to close the shut-off valve of each air vent a few weeks after the hydraulic commissioning.

Symbols used in diagrams

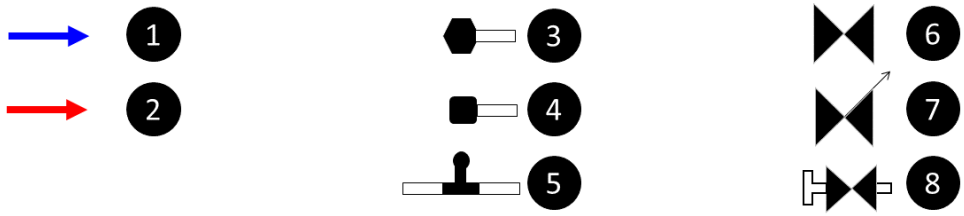

1. Hydraulic inlet
2. Hydraulic outlet
3. Field inlet / outlet fitting
4. DualQuickfit link plug
5. DualQuickfit link
6. Shut-off valve
7. Balancing valve
8. Tee hydraulic connection

1. **Homogeneous lines**

   Hydraulic balancing by the Tichelmann loop principle can be adopted when the panel fields are identical with the same number of panels, placed in the same direction. The lines entering and leaving the panel field must be the same length.

NOTE

To limit heat loss, it is preferable to extend the cold inlet pipes

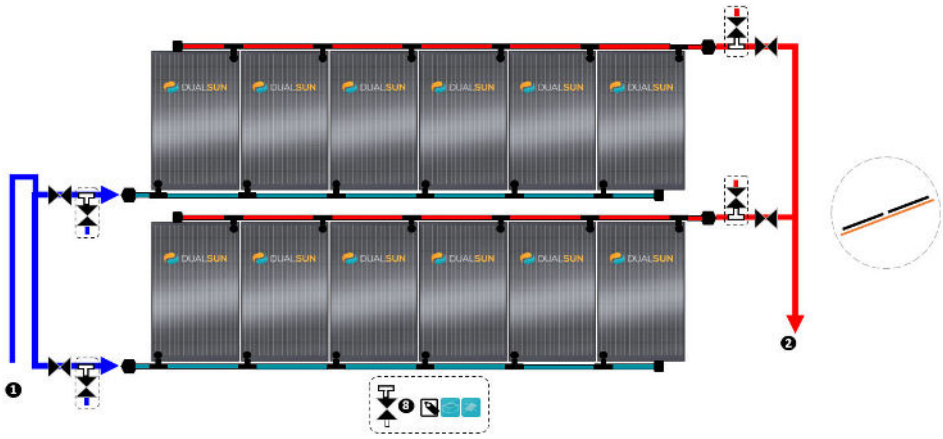

Pressurized system Portrait panels - 2 lines / Single orientation / 1 column - DN15 or DN26 Portrait links

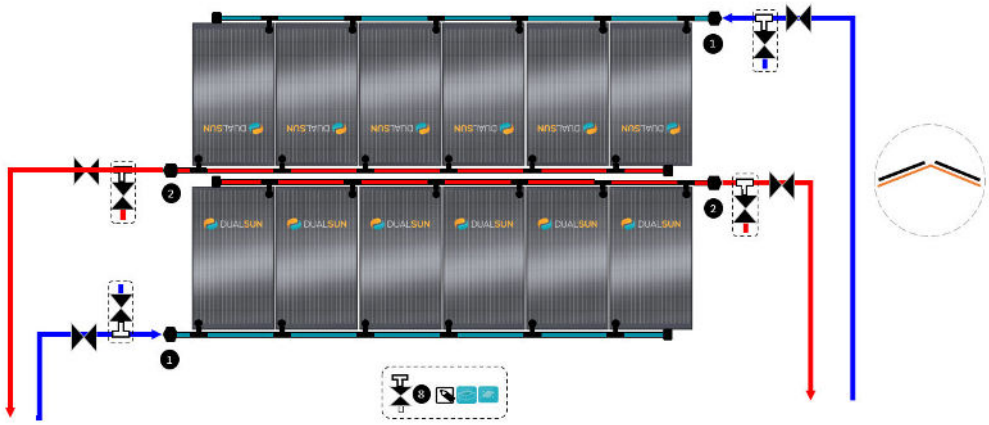

Pressurized system Portrait panels - 2 lines / Double orientation / 1 column - DN15 or DN26 Portrait links

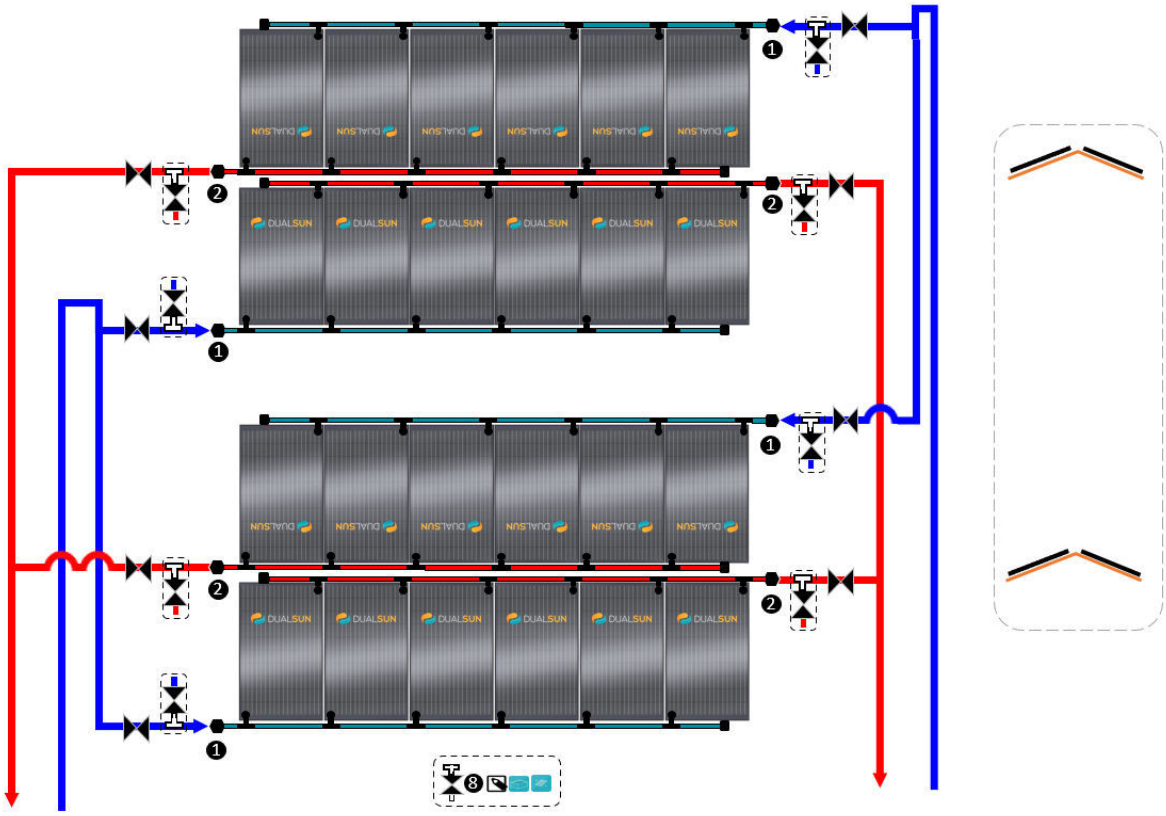

Pressurized system Portrait panels - 4 lines / Double orientation / 1 column - DN15 or DN26 Portrait links

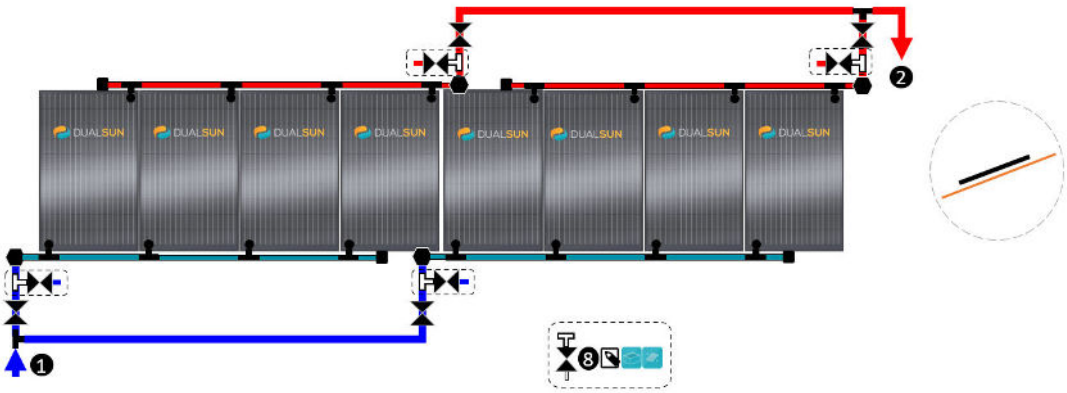

Pressurized system Portrait panels - 1 line / Single orientation / 2 columns - DN15 or DN26 Portrait connections

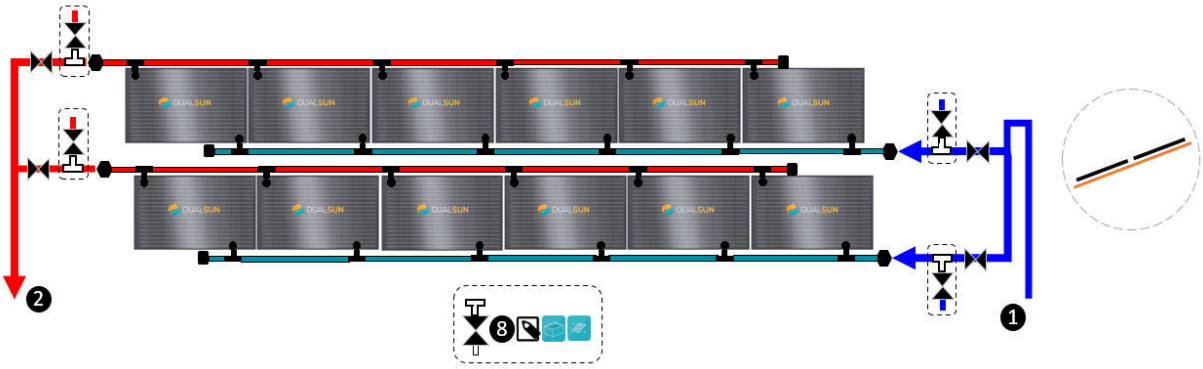

Pressurized system Landscape panels - 2 lines / Single orientation / 1 column - DN15 Landscape links

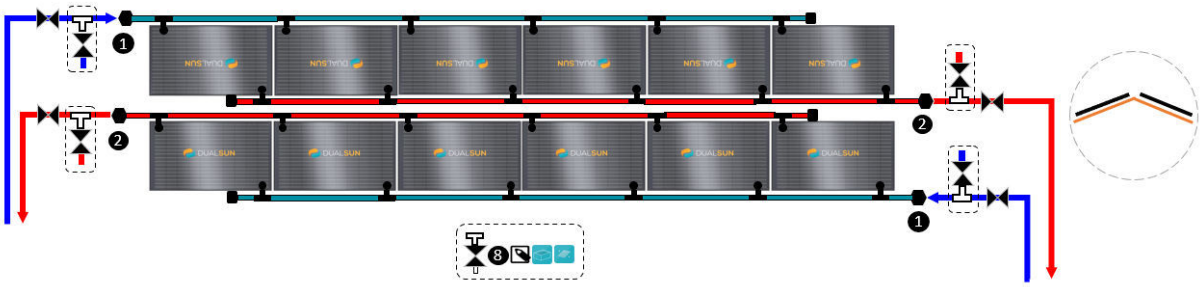

Pressurized system Landscape panels - 2 lines / Double orientation / 1 column - DN15 Landscape connections

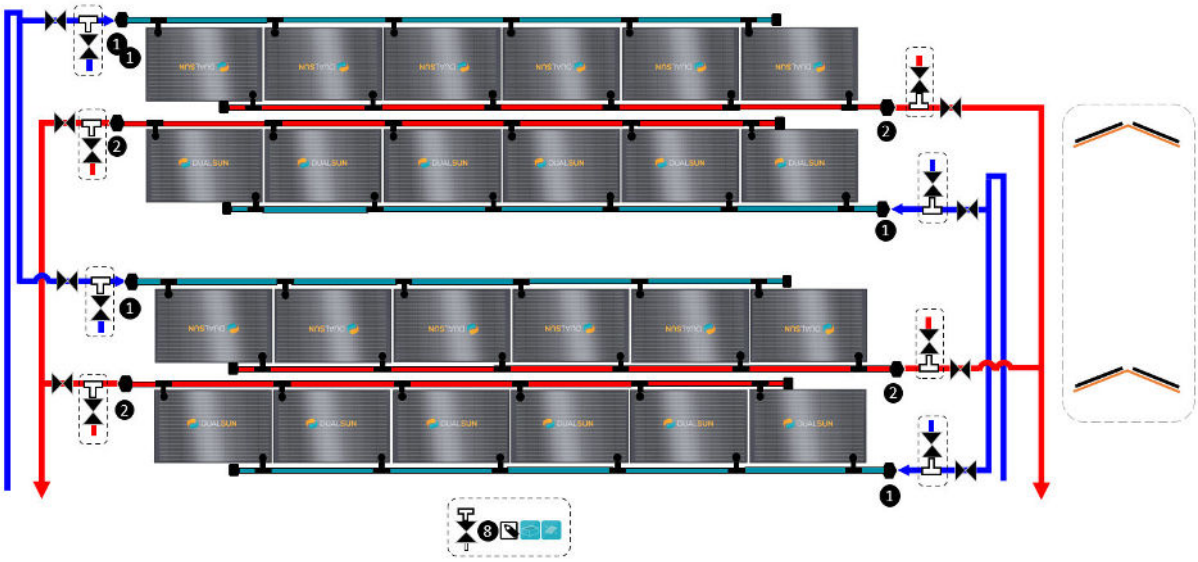

Pressurized system Landscape panels - 4 lines / Double orientation / 1 column - DN15 Landscape links

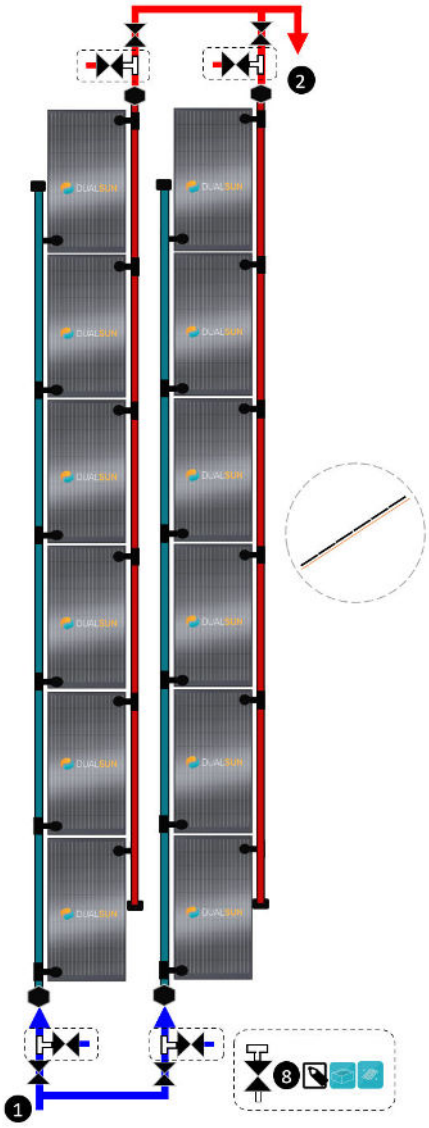

Pressurized system Portrait panels - DN15 Landscape links

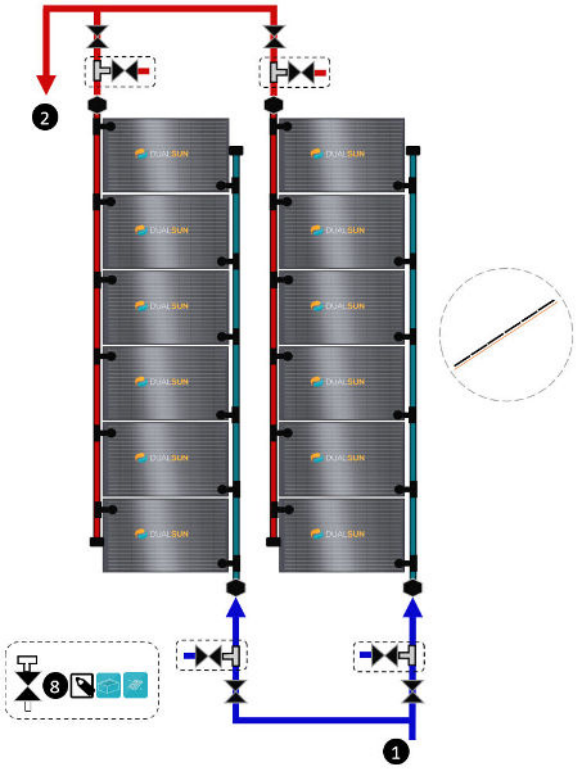

Pressurized system Landscape panels - DN15 or DN26 Portrait links

2.
3. **Non-homogeneous lines**

   When hydraulic balancing by Tichelmann loop is not feasible or the panel fields are not homogeneous, number of panels per field different and / or panels placed in different directions (portrait / landscape), the installation of balancing valves is recommended. The dimensioning of the balancing valves depends on the number of panels per line and the recommended nominal flow rate, see Recommended hydraulic flow rates for the DualSun SPRING panel [8].

IMPORTANT

In the case of automatic balancing valves:

Provide for the installation of bypass / isolation valves in parallel with the automatic balancing valves for commissioning filling (higher flow rate).

In the case of manual balancing valves:

Fully open the balancing valves during commissioning filling

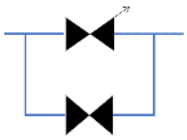

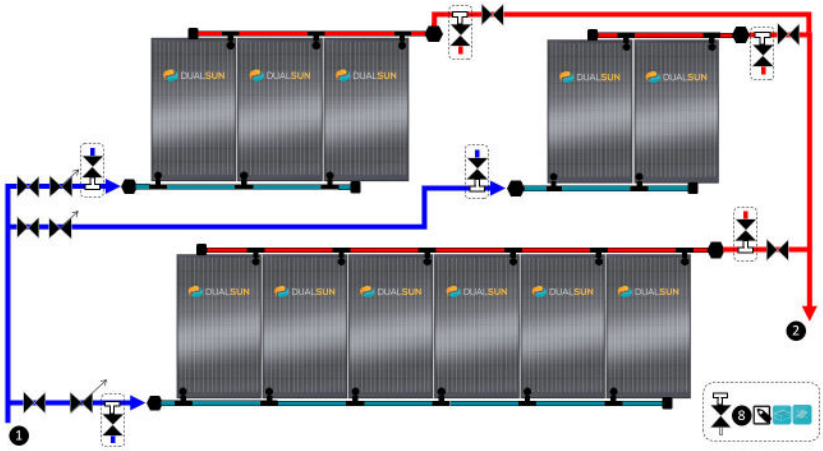

Pressurized system Portrait panels with balancing valves - DN15 or DN26 Portrait links

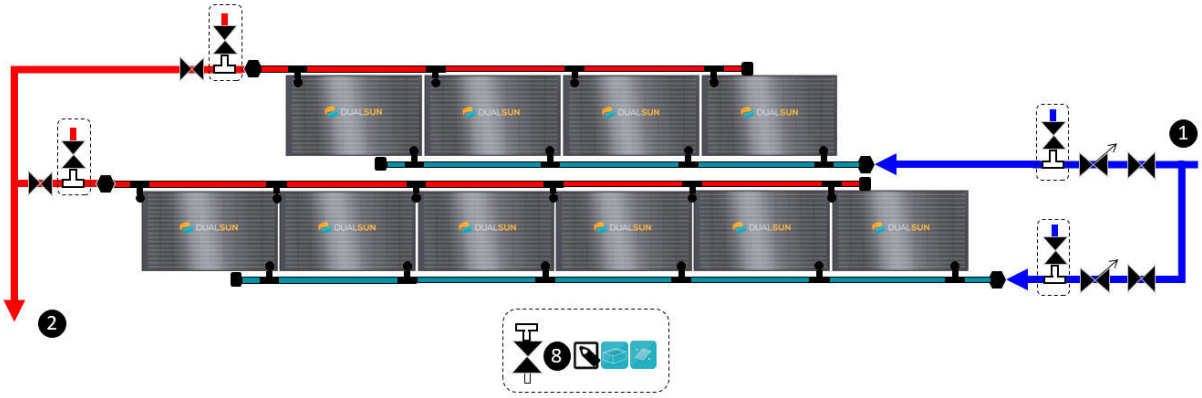

Pressurized system Landscape panels with balancing valves - DN15 Landscape links

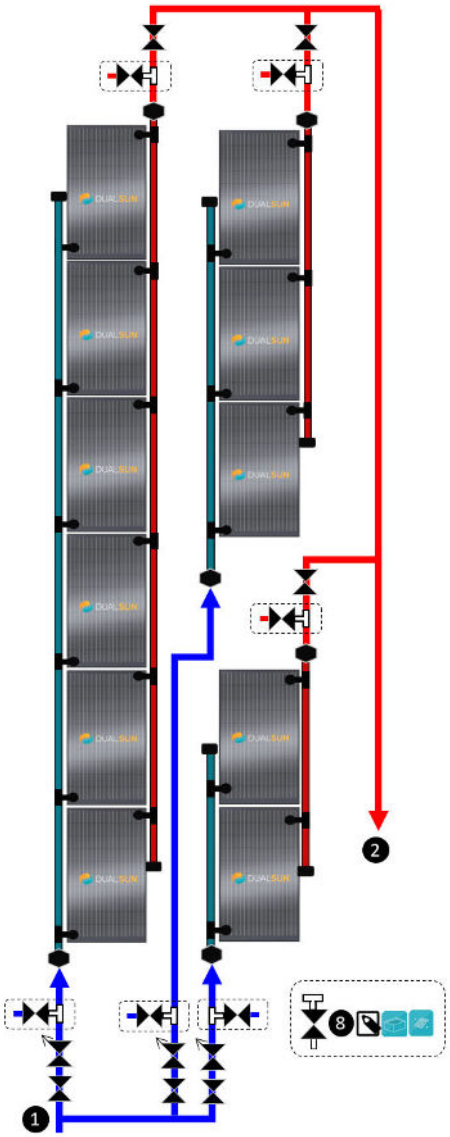

Pressurized system Portrait panels with balancing valves - DN15 Landscape links

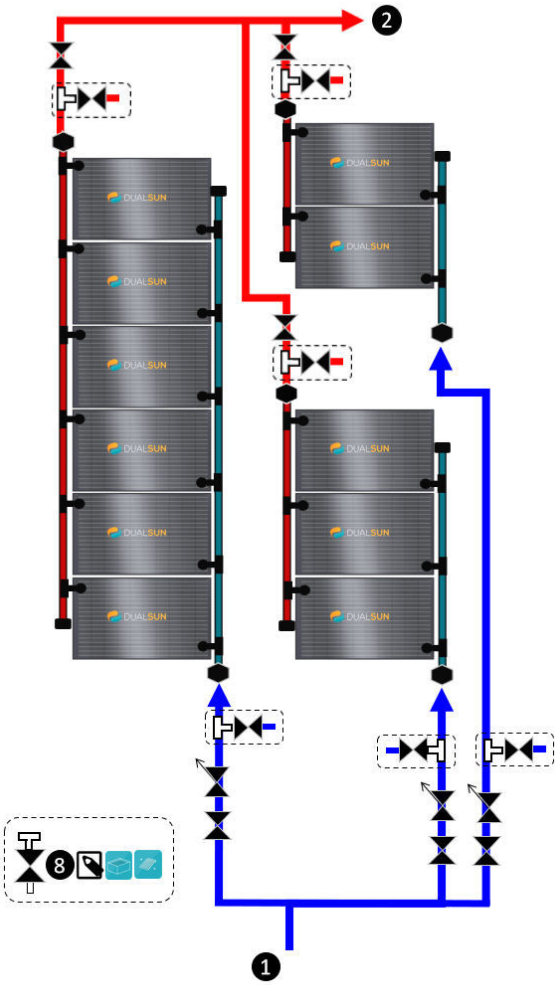

Pressurized system Landscape panels with balancing valves - DN15 or DN26 portrait links

5.2.2. Hydraulic balancing of panel fields for DualSun solar swimming pool heating system

IMPORTANT

The installation of isolation valves is necessary for:

1. Improve the bleeding of the air contained in the hydraulic circuit during filling while commissioning: Fill line by line in order to purge the air contained in the circuit more quickly and ensure the proper bleeding of each line
2. Carry out targeted maintenance operations: In the event of a fault on a hydraulic line, locking out the defective line makes it possible to intervene without stopping the installation. Only the faulty line can therefore be drained for maintenance. The filling of the hydraulic line on which the maintenance was carried out must then be carried out with all the other isolated hydraulic lines to avoid injecting air into the general circuit.

Installation of panels in portrait only to allow wintering water draining

Symbols used in diagrams

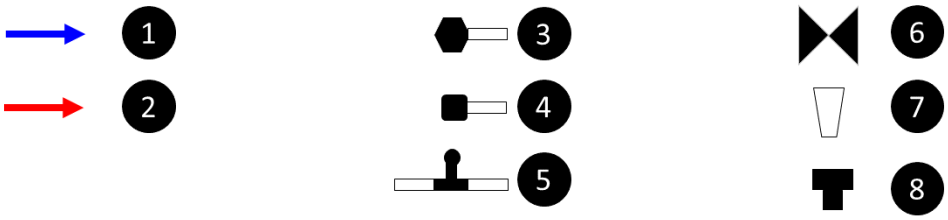

1. Hydraulic inlet
2. Hydraulic outlet
3. Field input / output fitting
4. DualQuickfit link plug
5. DualQuickfit link
6. Stop valve
7. Flowmeter
8. Air vent

1. **Homogeneous lines**

   Hydraulic balancing by the Tichelmann loop principle can be adopted when the panel fields are identical with the same number of panels, placed in the same direction. The lines entering and leaving the panel field must be the same length.

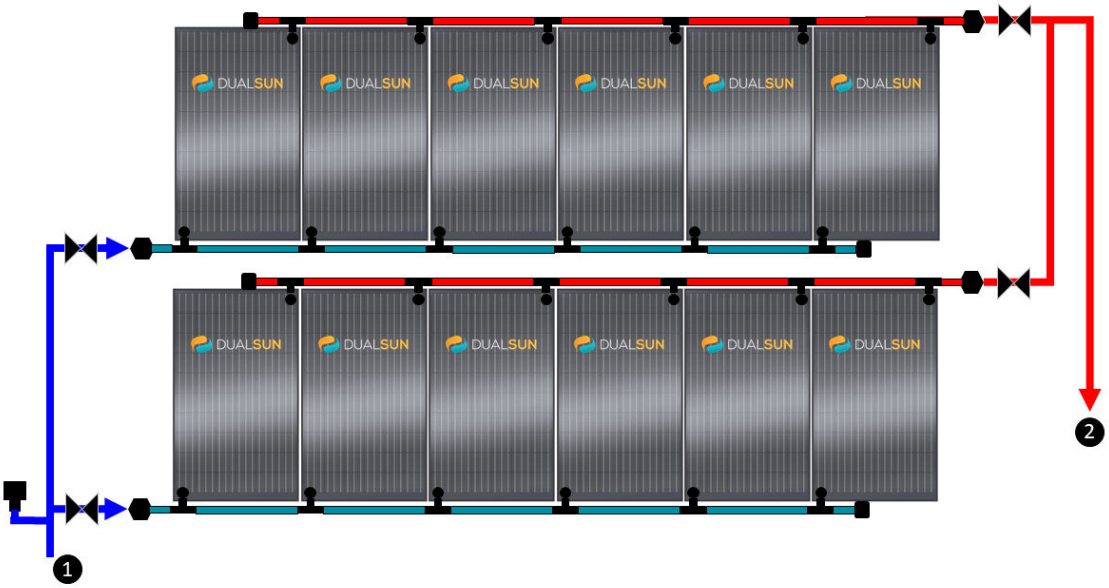

Direct pool heating system 2 lines / 1 column - Portrait panels - DN26 Portrait links

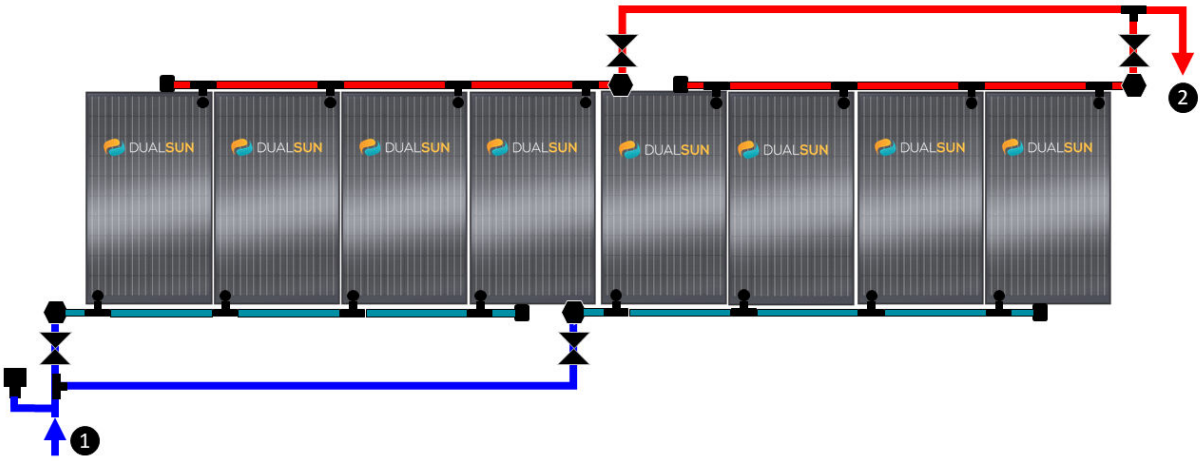

1 line / 2 column direct pool heating system - Portrait panels - DN26 Portrait links

2. **Non-homogeneous lines**

   When hydraulic balancing by Tichelmann loop is not feasible or the panel fields are not homogeneous, number of panels per field different and / or panels placed in different directions (portrait / landscape), the installation of balancing valves is recommended. The dimensioning of the balancing valves depends on the number of panels per line and the recommended nominal flow rate, see Recommended hydraulic flow rates for the DualSun SPRING panel [8].

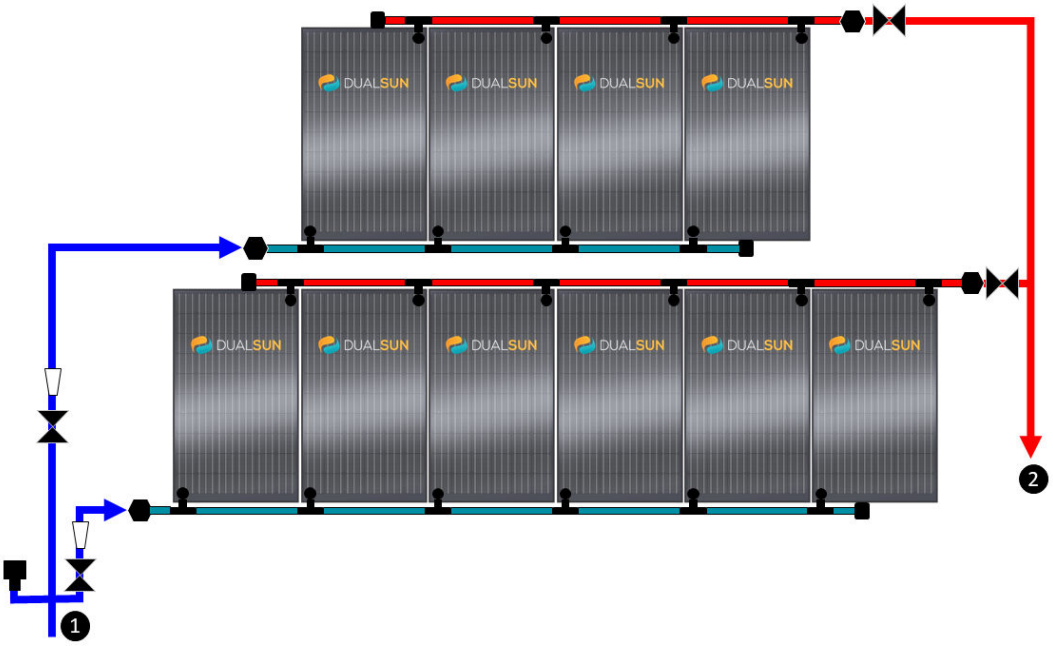

Direct pool heating system - Portrait panels with balancing valves - DN26 Portrait links

5.3. Connection of the panel field to the transfer circuit

The transfer circuit lines transport the heat transfer fluid between the panel field and the elements of the solar circuit in the technical room.

Once the inter-panel links are installed on the panels as indicated in Hydraulic connection of the panels [30], the transfer lines are to be connected to the male inlet/ outlet M3/4" fittings for DN15 links, or M1" fittings for DN26 links, installed at the end of the DualQuickfit inter-panel links.

The sealing of the fittings is ensured by a high-temperature fibre O-seal (in addition to the usual sealing products such as oakum, filetix, etc.).

5.3.1. Selection of transfer lines

The choice of transfer lines must be considered in order to:

- optimize ease and cost of installation
- limit linear pressure losses

Indeed, the flow of the heat transfer fluid passing through the transfer lines is a function of the number of panels. This determines the diameter of the pipes to limit the linear pressure losses. The choice of pipe diameter can change the choice of pipe material according to technical and economic criteria.

Selection of transfer lines - Pressurized system [47]

Selection of transfer pipes for DualSun solar swimming pool heating system [49]

5.3.1.1. Selection of transfer lines - Pressurized system

WARNING

It is very important **not to use copper** in the hydraulic networks connected with the panels, as there would be a high risk of galvanic corrosion of the exchanger.

1. **Selection of material for transfer lines**

   For the connection of the solar station to the fields of panels, three types of pipes can be used:
   - Copper pipes
   - Stainless steel pipes
   - PEX-Al-PEX multilayer pipes

   It is possible to choose transfer pipes in multilayer PEX-Al-PEX due to the limited temperatures (<80 ° C) and pressures (<< 6 bar) in the solar circuit with DualSun SPRING hybrid solar panels.

   Note :
   - The hydraulic circuit must be designed taking into account the rate of thermal expansion of the pipes
   - The hydraulic lines must resist UV rays, corrosion due to external agents and wildlife (rodents, birds) for parts exposed to the outdoors
   - Hydraulic lines and fittings must be of compatible materials
2. **Selection of the diameter of the transfer lines**

   The choice of the diameter of the transfer lines limits the pressure losses in the solar circuit and guarantees a good hydraulic filling when commissioning the system. As an indication, the following charts have been defined according to the recommended flow rate for each application.

   The flow rates per application are recommended to optimize heat exchange.

   a. **DSWH system - Nominal flow rate = 60 L/h/panel**

      i. **Multilayer**

Number of panels	1 → 9	10 → 16	17 → 30	31 → 54	55 → 102
Pipe diameter	DN20	DN26	DN32	DN40	DN50

      ii. **Copper**

Number of panels	1 → 9	10 → 16	17 → 30	31 → 54	55 → 90
Pipe diameter	DN18	DN22	DN28	DN32	DN42

      iii. **Corrugated stainless steel**

Number of panels	5 → 8	9 → 16	17 → 30	31 → 44	45 → 90
Pipe diameter	DN15	DN20	DN25	DN32	DN40

   b. **DHW pool discharge system or HP coupling - Nominal flow rate = 100 L/h/panel**

      i. **Multilayer**

Number of panels	1 → 12	13 → 24	25 → 44	45 → 80
Pipe diameter	DN26	DN32	DN40	DN50

ii. **Copper**

Number of panels	1 → 10	11 → 20	21 → 30	31 → 60
Pipe diameter	DN22	DN28	DN32	DN42

iii. **Corrugated stainless steel**

Number of panels	11 → 20	21 → 36	37 → 60	27 → 46
Pipe diameter	DN20	DN25	DN32	DN40

5.3.1.2. Selection of transfer pipes for DualSun solar swimming pool heating system

1. **Selection of material for transfer lines**

   For direct swimming pool heating systems, it is recommended to use pressure PVC pipes with anti UV treatment.

   For aesthetic reasons, it is possible to paint PVC pipes: take a good quality paint, anti UV if possible.
2. **Selection of the diameter of the transfer pipes**

   We have defined a chart to choose the diameter of the pipes according to the number of DualSun SPRING panels connected to the solar swimming pool heating system.

   A flow rate of 200L / h / panel is recommended to optimize the heat exchanges.

Number of panels	1 → 18	19 → 32	33 → 56	57 → 90
Pipe diameter	DN40	DN50	DN63	DN75

5.3.2. Insulation and protection of piping

For applications where the temperature of the tank to be heated is higher than 30 ° C, the hydraulic transfer lines must be insulated. The thermal insulation must resist UV rays

In the case of pre-insulated hydraulic pipes, the insulation can be cut to facilitate the passage of partitions.

For all other applications, the hydraulic transfer pipes do not require thermal insulation.

5.4. Panel temperature probe

Any installation fitted with a solar controller requires the installation of a temperature sensor at the level of the panels to control the solar circulator.

1. Probe hole on the collector: The new version of the SPRING DSTNxxxM12-B320SBB7 and DSTIxxxM12-B320SBB7 incorporates a Probe hole on the collector. In this case, the DualSun panel temperature probe is a 5.4 mm PT1000 probe, delivered with the DualSun essential kit. The probe is inserted into the hole of the collector close to the hydraulic outlet connection.

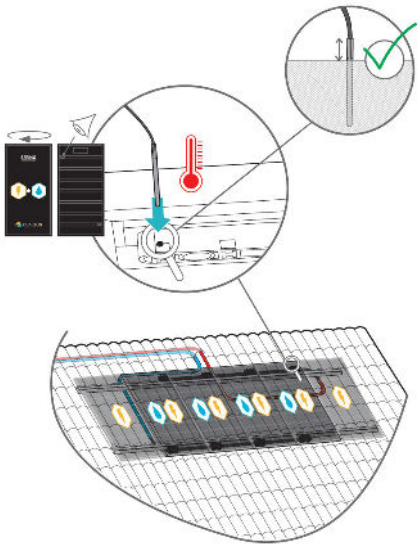

2. Probe hole present on the exchanger: Previous versions of the SPRING incorporate a probe hole nect to the absorber. In this case, the DualSun panel temperature probe is a 4 mm PT1000 probe, delivered with the DualSun essential kit. The probe is inserted into the notch provided in the heat exchanger of the SPRING panel, next to the hydraulic outlet connection.

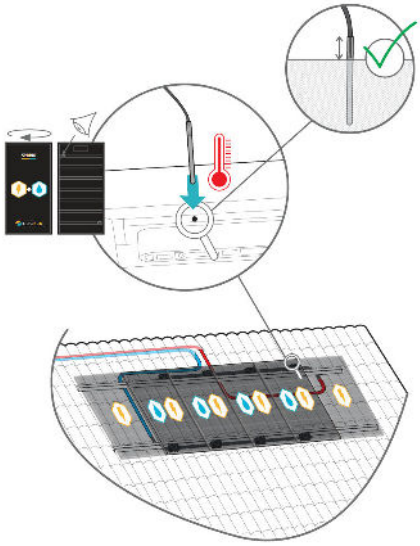

NOTE

Place the panel temperature probe and wind its cable properly before placing the panel on the mounting system.

IMPORTANT

It is important to include the installation of the panel temperature probe cable in the routing of the transfer lines. It is necessary to route a probe wire to the roof to connect the panel temperature probe to the solar regulation

For this, use a cable with at least two conductors with a diameter greater than 0.5mm^2 (2G0.5)

NOTE

The probe must then be connected to the solar controller

Refer to the instructions for the solar controller used.

6. Cleaning the surface of the modules

The greater the degree of contamination of the surface of the PV system, the less the cells are able to absorb the energy contained in the incident sunlight.

By tilting the panels slightly in relation to the horizontal, rain and snow can clean the surface, and thus temporarily protect them from additional contamination. However, after a while, dust, leaves or bird droppings will dirty the glass on the front panel and thereby reduce the output power.

In case of persistent soiling, the panels should be washed with cold water and a soft sponge.

To clean greasy stains such as fingerprints (especially just after installation) you can use isopropyl alcohol.

CAUTION

Never use solvents or a pressure washer, and never scrape the panel surface. Cleaning operations must be carried out by qualified professionals.

DANGER

Work at height: Refer to the recommendation published by the national risk prevention body.

7. Decommissioning of the installation

Before any intervention on the device / installation, cut off the power supply and injection (via the appropriate fuse or a general switch, for example) and prevent any recommissioning.

For any intervention involving dismantling of the controllers, make sure that the internal components are not likely to cause a discharge of static electricity.

Removing a module [53]

Hydraulic disconnection [53]

Decommissioning of the installation [53]

7.1. Removing a module

If it is necessary to dismantle a module, the following procedure must be followed:

- Drain the installation or the hydraulic line
- Cut the electrical circuit upstream and downstream of the inverter.
- Risk of electric shock. For this, refer to the manufacturer's manual for the inverter / microinverter. For this it may be necessary to use a particular disconnection tool. Separate the module from its support.
- Disconnect the electrical connectors.
- Disconnect the module grounding.
- Disconnect the quick coupling from the inter-panel links, see Hydraulic disconnection [53]
- If the module to be removed is the last module in the hydraulic field, the temperature probe must be removed, see Panel temperature probe [49]

7.2. Hydraulic disconnection

For SPRING modules, once the installation has been emptied, the DualQuickfit quick couplings can be dismantled using a special pliers, supplied in the essential kit.

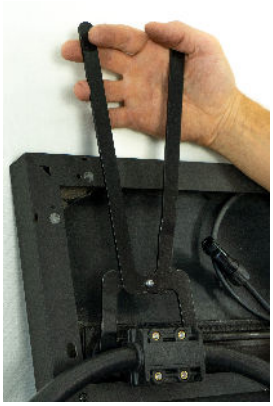

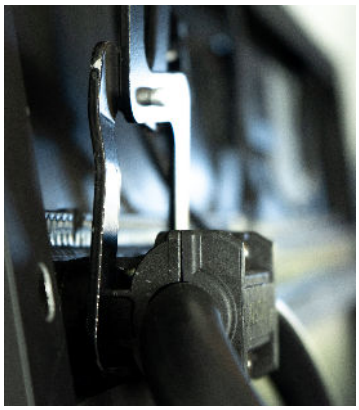

7.3. Waste treatment

When handling waste from a used DualSun system, the applicable regional and national regulations must be observed.

DualSun is a PV Cycle member.

8. Responsibilities

DualSun	Installer	User
DualSun products are produced in compliance with the requirements of the various applicable European directives.	The installation and the first commissioning must be carried out in the rules of the art in accordance with: • The information in the installation instructions, • Legislation and standards in force. The installer must inform the user of the need for regular maintenance.	The user must call on qualified professionals: • To carry out the installation and carry out the initial commissioning, • To have regular maintenance performed on the installation. The user must keep the installation documents near the system components.

8.1. Guarantee conditions

See the document “DualSun Contractual Guarantee” for DualSun products.

For the other components of the installation, see the warranty conditions of the various manufacturers.

8.2. Disclaimer

DualSun cannot be held liable in the following cases:

- Failure to comply with the instructions contained in the Notice concerning the installation, use, operation and maintenance of the installation.
- Non-compliance with the safety rules defined in the recommendation published by the national risk prevention organization

9. Technical appendices

9.1. SPRING hydraulic pressure losses

Hydraulic panel pressure loss in portrait or landscape / DualQuickfit DN15 Portrait connections

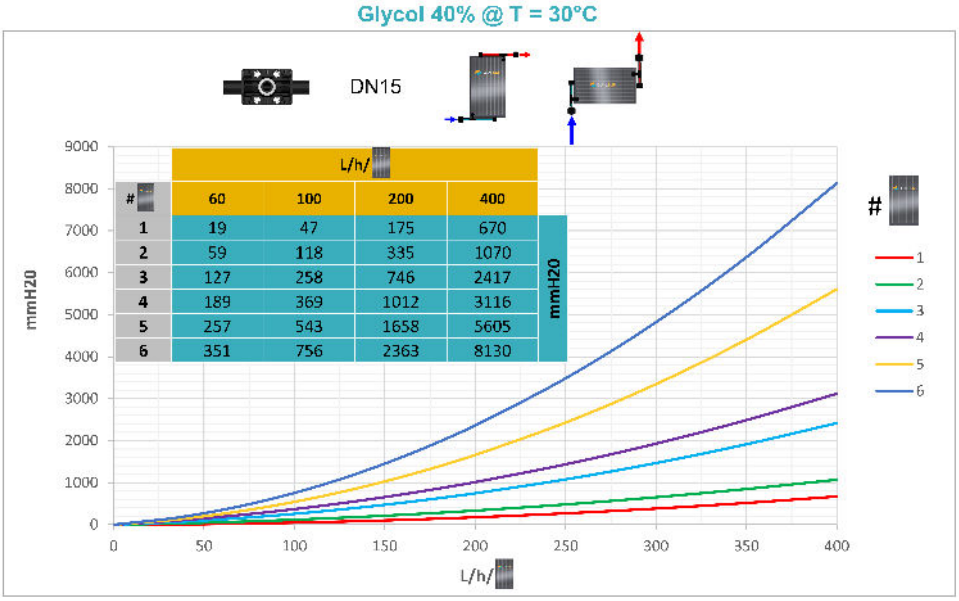

#	L/h/ 60	100	200	400
1	19	47	175	670
2	59	118	335	1070
3	127	258	746	2417
4	189	369	1012	3116
5	257	543	1658	5605
6	351	756	2363	8130

Panel hydraulic pressure loss in portrait or landscape / DualQuickfit DN15 Landscape connections

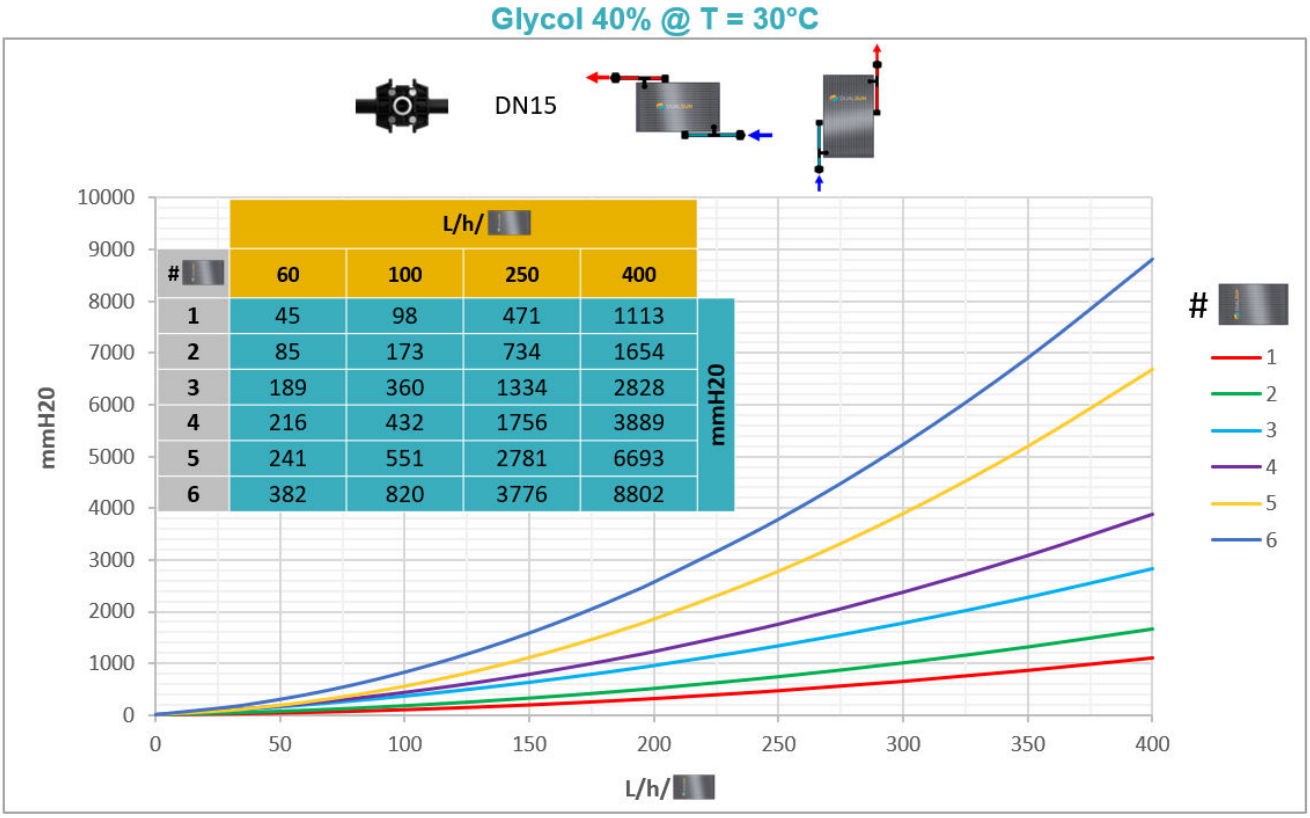

#	L/h/ 60	100	250	400
1	45	98	471	1113
2	85	173	734	1654
3	189	360	1334	2828
4	216	432	1756	3889
5	241	551	2781	6693
6	382	820	3776	8802

Hydraulic head loss of panel in portrait / DualQuickfit DN26 Portrait connections

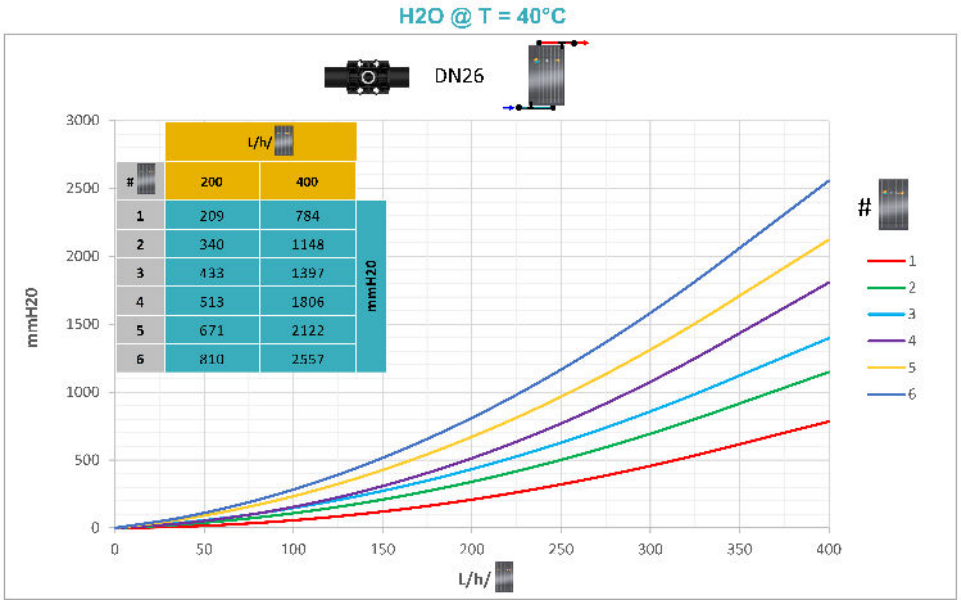

#	L/h/ 200	400
1	209	784
2	340	1148
3	433	1397
4	513	1806
5	671	2122
6	810	2557

9.2. SPRING thermal power

Calculation formula:

$$P = a0.AG - a1.A.\Delta T \text{ (water-air) [Wth]}$$

With:

- a0 = Panel optical efficiency [%]
- a1 = Loss coefficient [W/K/m²]
- A = Panel area [m²]
- G = Solar irradiation [W/m²]
- ΔT (water-air) = Tm - Ta [°C]
- Tm = Average temperature of the fluid in the panel = (Tin + Tout) / 2 [°C]
- Ta = Ambient air temperature [°C]

Panel data a0, a1 and A are available in the technical sheets accessible in the online documentary space.

The values of the coefficients a0 and a1 depend on the wind speed. In the technical sheets, these values are taken from EN 9806: 2017 certification tests for solar collectors without glazing carried out with a wind speed u = 1 m/s.

The thermal power of DualSun SPRING panels with different wind speed values can be calculated according to the following coefficient formulas a0 and a1:

- a0 = eta0 - c6 * (u-3)
- a1 = c1 + c3 * (u-3)

With:

- u = Wind speed [m/s]

	SPRING - NON-INSULATED	SPRING - INSULATED
eta0	0,503	0,488
c1	16,91	12,76
c3	0,452	0,999
c6	0,043	0,047

Thermal power of DualSun SPRING panels with wind u = 1 m / s

SPRING - NON-INSULATED

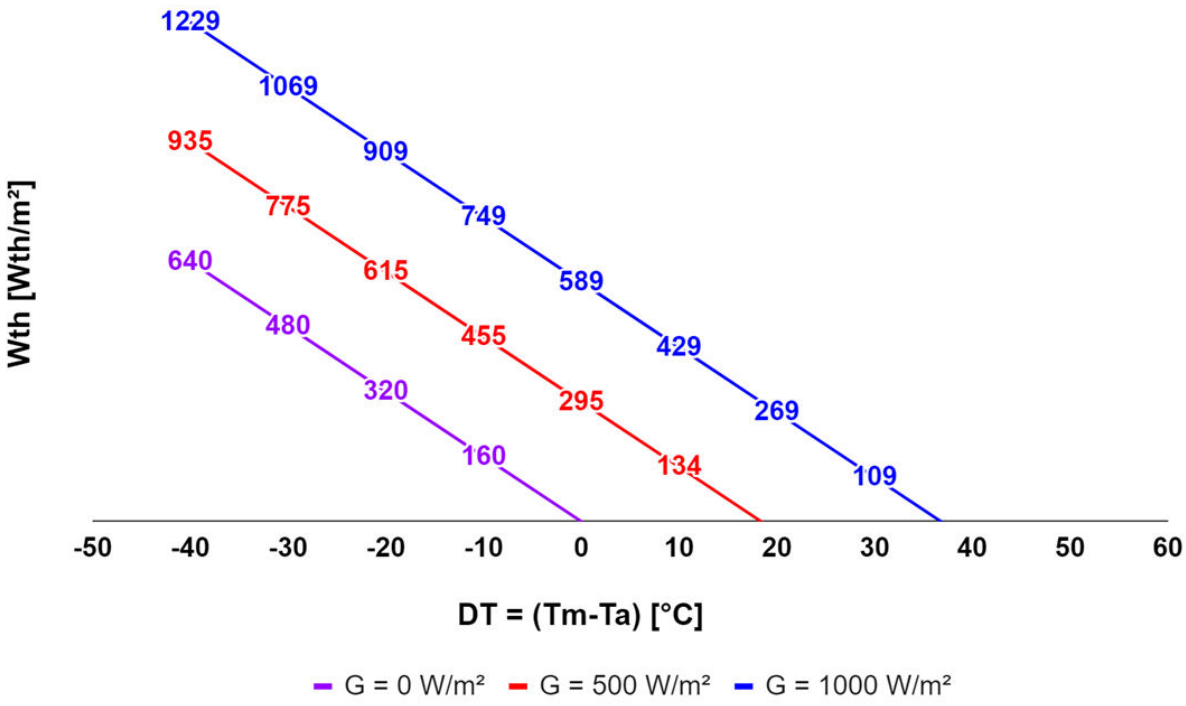

SPRING - INSULATED

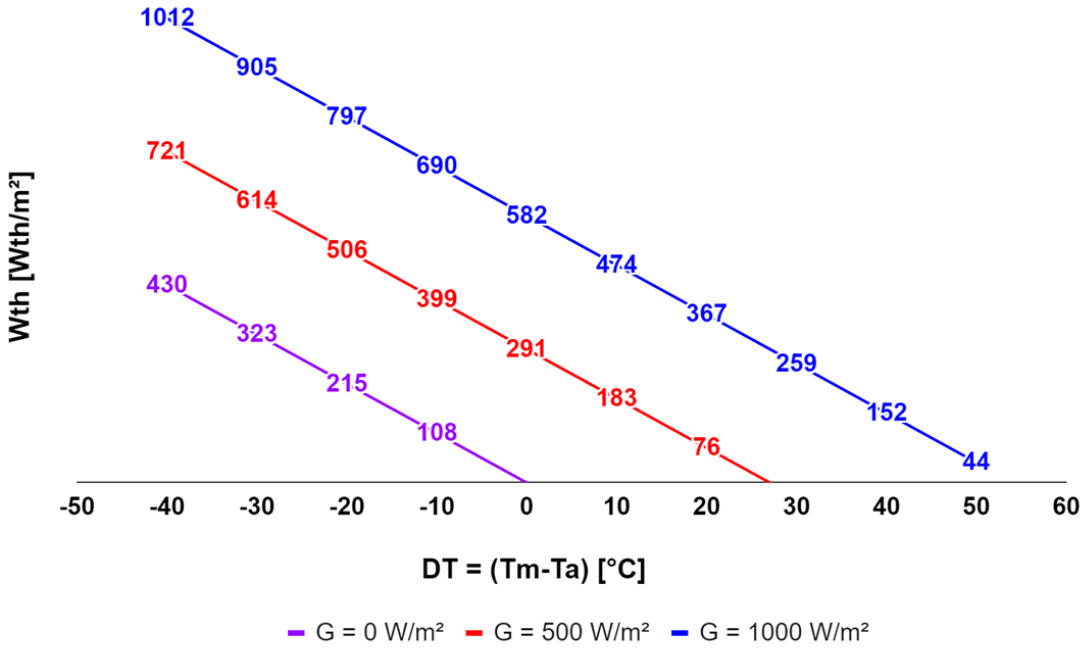

Thermal power output of DualSun SPRING panels with wind u = 3 m / s

SPRING - NON-INSULATED

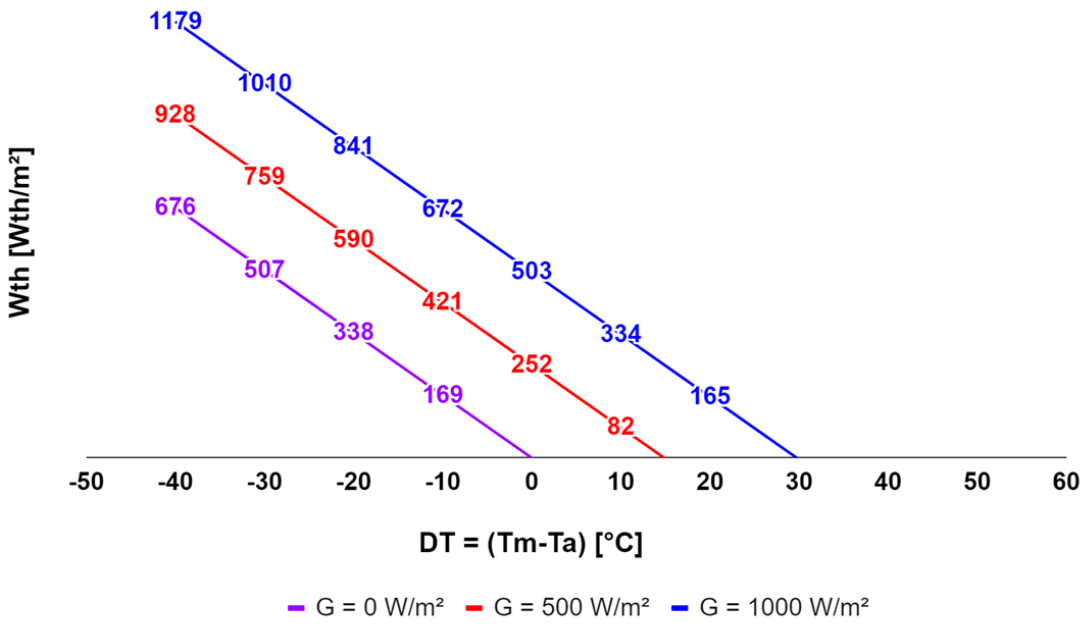

SPRING - INSULATED

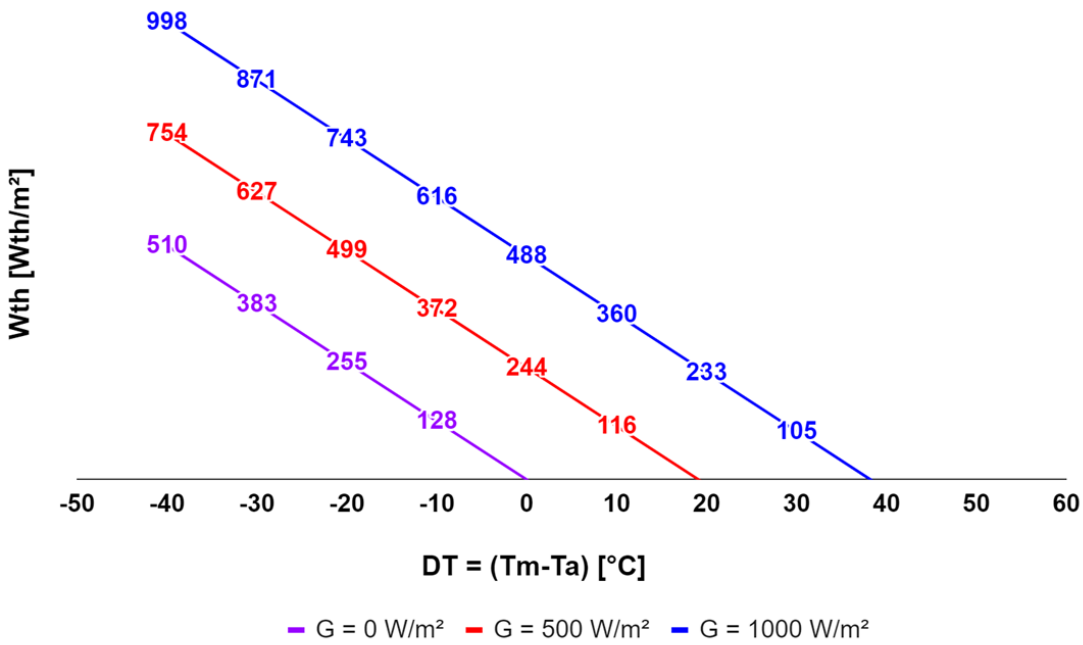

9.3. SPRING thermal behavior

Temperature gradient provided by DualSun SPRING panels according to the inlet fluid temperature and the ambient air temperature:

Calculation formula:

$$DT = [2.G.A.a0/(2.\rho.Q.Cp+a1.A)]-[2.A.a1/(2.\rho.Q.Cp+a1.A)].(Tin-Ta)$$

With:

- DT = Tout - Tin = Heat input to the fluid by the solar panel [° C]
- a0 = Panel optical efficiency [%]
- a1 = Loss coefficient [W/K/m²]
- A = Panel area [m²]
- G = Solar irradiation [W/m²]
- ρ = Fluid volumic mass [kg/m^3]
- Q = flow rate [m^3/s]
- Cp = Calorific capacity of the fluid [kJ/K/kg]
- Tout = Panel fluid outlet temperature [° C]
- Tin = Panel fluid inlet temperature [°C]
- Ta = Ambient air temperature [°C]

Panel temperature gradient as a function of (Tin-Ta) for a flow rate of 30 L/h/panel

SPRING - INSULATED

Application: ISWH with variable speed circulator

Fluid: 40% glycol water (Cp = 3800 J/K/kg - ρ = 1000 kg/m^3)

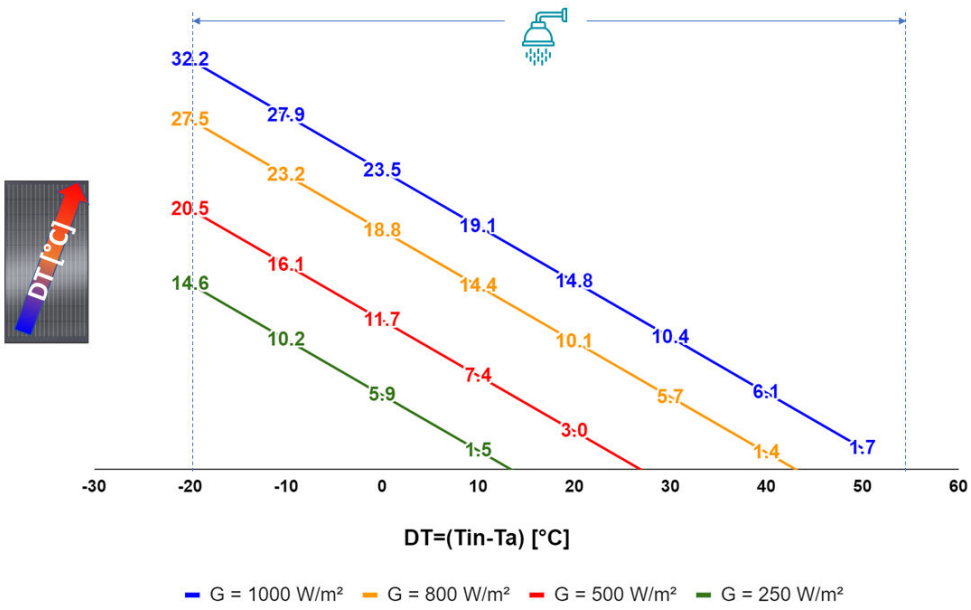

Panel temperature gradient as a function of (Tin-Ta) for a flow rate of 60 L/h/panel

SPRING - INSULATED

Applications: ISWH / CSWH / Technical water storage

Fluid: 40% glycol water (Cp = 3800 J/K/kg - ρ = 1000 kg/m^3)

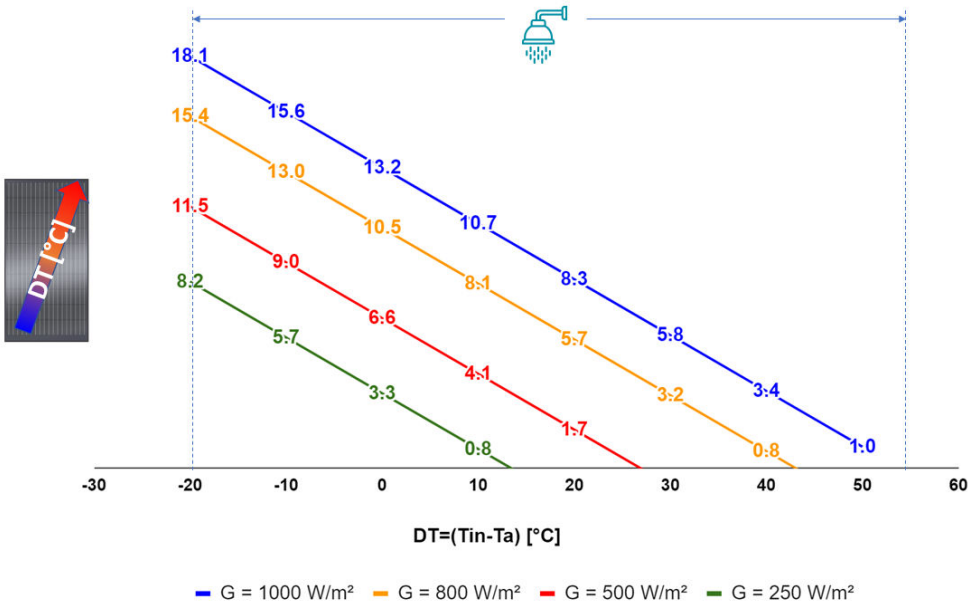

Panel temperature gradient as a function of (Tin-Ta) for a flow rate of 100 L/h/panel

SPRING - NON-INSULATED

Applications: Swimming pool heating - Pressurized / Heat pump

Fluid: 40% glycol water (Cp = 3800 J/K/kg - ρ = 1000 kg/m^3)

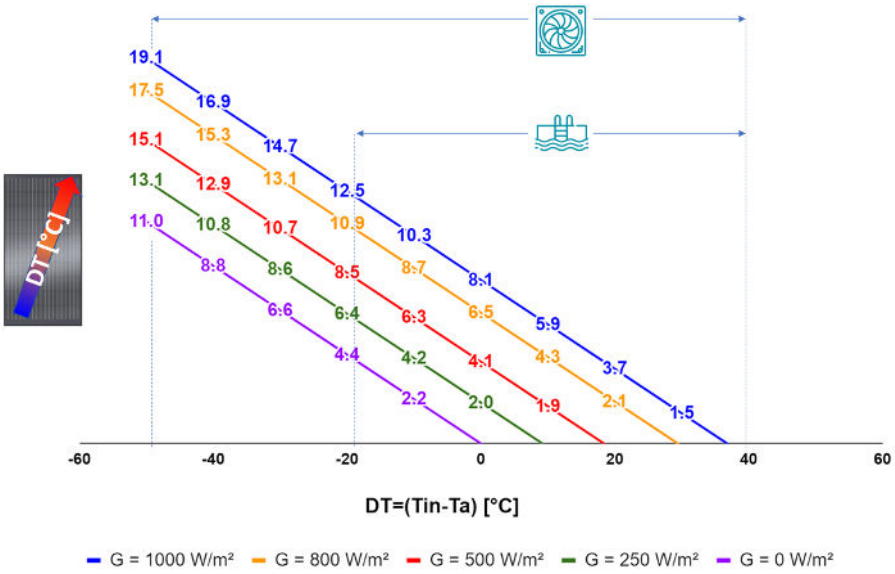

SPRING - INSULATED

Applications: ISWH with pool discharge / Swimming pool heating - Pressurized

Fluid: 40% glycol water (Cp = 3800 J/K/kg - ρ = 1000 kg/m^3)

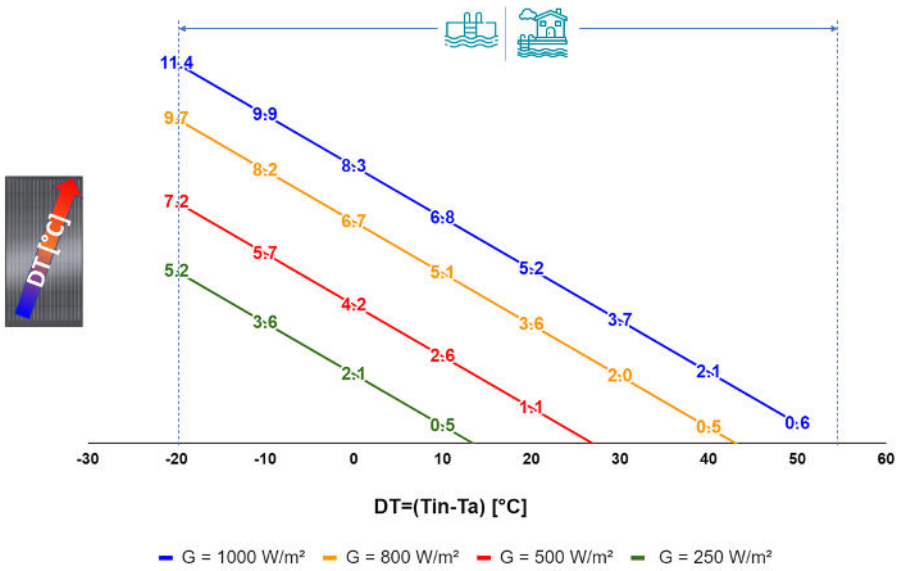

Panel temperature gradient as a function of (Tin-Ta) for a flow rate of 200 L/h/panel

SPRING - NON-INSULATED

Application: Heat pump

Fluid: 40% glycol water (Cp = 3800 J/K/kg - ρ = 1000 kg/m^3)

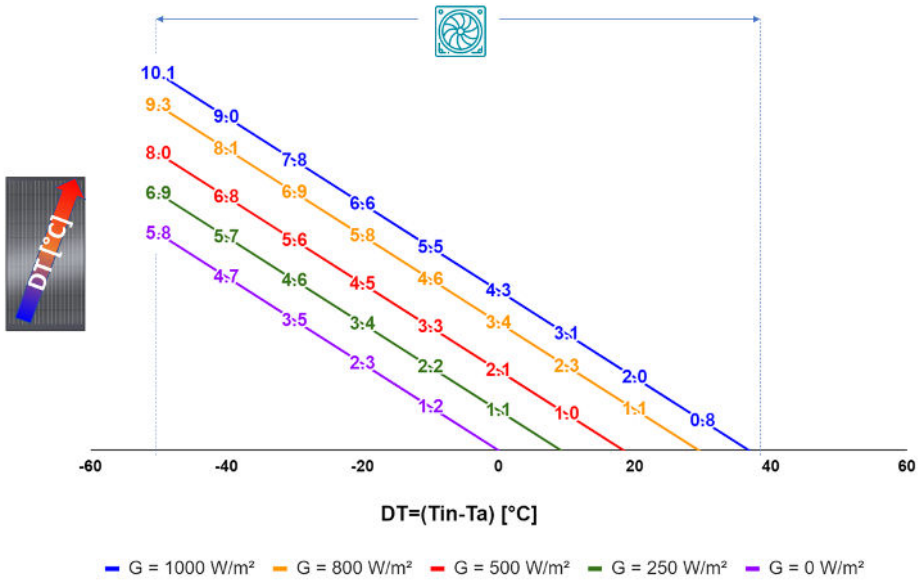

SPRING - NON-INSULATED

Application: Direct pool heating

Fluid: Water (Cp = 4180 J/K/kg - ρ = 1000 kg/m^3)

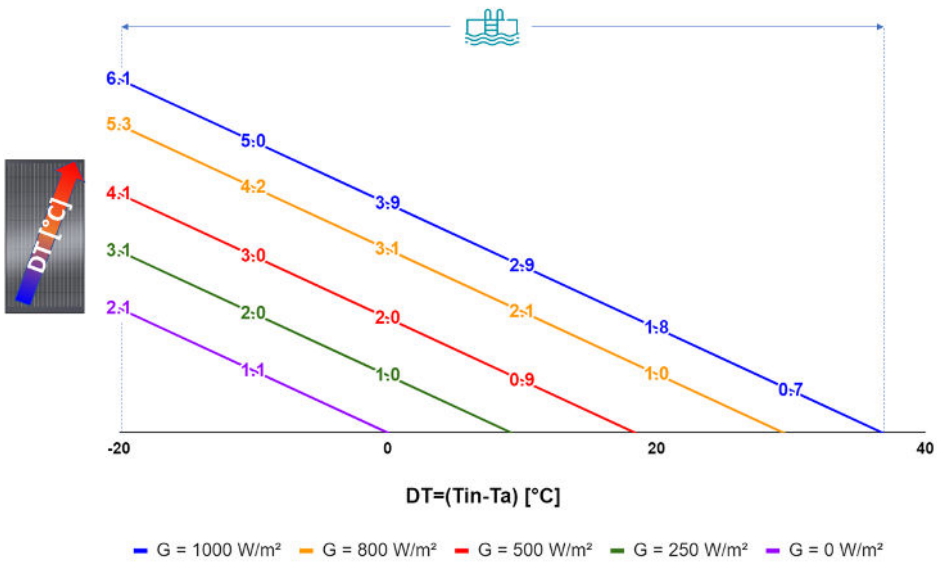

9.4. Sizing and adjusting the DualSun filling vessel

The filling vessel is only recommended for installations of more than 12 DualSun SPRING hybrid panels in a pressurized system.

The filling vessel makes it possible to store heat transfer fluid at the time of the hydraulic commissioning and to improve the quality of the filling of the installation.

Following numerous tests, the team of DualSun engineers defined the following calculation formula to determine the volume of vessel to be connected to an installation equipped with DualSun SPRING panels.

Panels in portrait:

$$\mathbf{V_{vessel} = [V_{fluid\_expansion} + (Number\_panels\_SPRING \times 0.33)] / Acceptance\_factor}$$

Landscape panels:

$$\mathbf{V_{vessel} = [V_{fluid\_expansion} + (Number\_panels\_SPRING \times 0.93)] / Acceptance\_factor}$$

NOTE

The choice of vase volume must be rounded up to the higher standard volume

With:

- V_{vessel} = Total vessel volume in liters [L]
- Number_panels_SPRING = total number of SPRING panels connected to the installation
- $V_{fluid\_expansion} = V_{installation} \times C_{fluid\_expansion}$
  - $V_{installation}$ = Total volume of the installation in liters [L]

    $V_{filling}$ = Volume of pipes + Volume of panels + Volume of heat exchanger

    Volume of a SPRING exchanger = 5L

  - $C_{fluid\_expansion}$ = Heat transfer fluid expansion coefficient [%]
- Acceptance_factor = $[(P_{filling} + 1) - (P_{inflation\_vessel} + 1)] / (P_{filling} + 1)$
  - $P_{filling}$ = Hydraulic system start-up pressure at the solar station

    $$P_{filling} = 1{,}5 + H / 10 \text{ [bar]}$$

  - $P_{inflation\_vessel}$ = Tank inflation pressure before hydraulic filling of the installation

    $$P_{inflation\_vessel} = 0.1 + H / 10 \text{ [bar]}$$

- H = Installation height in meters [m] (distance between filling vessel and panels)

Heat transfer fluid expansion coefficient (%)												
Glycol content (%)	Temperature (°C)											
	-20	-10	0	10	20	30	40	50	60	70	80	90
0			0	0,1	0,2	0,4	0,8	1,2	1,7	2,3	2,9	3,6
10			0,1	0,3	0,5	0,7	1,1	1,5	2	2,6	3,2	3,9
20			0,2	0,5	0,8	1,1	1,4	1,8	2,3	2,9	3,5	4,2
30		0,1	0,4	0,7	1	1,3	1,6	2,1	2,6	3,1	3,8	4,4
40	0,4	0,7	1	1,3	1,5	1,7	2,1	2,5	3	3,6	4,2	4,9
50	0,6	0,9	1,2	1,5	1,8	2	2,4	2,8	3,3	3,9	4,5	5,2